Command Individual Augmentation Coordinator (CIAC) Orientation

NAVY BASE – NORFOLK, VA
Granby Room, NSSA, BLDG LF-18
07 June 2012

Agenda

Time	Topic
0830 – 0845	Welcome/Admin/Logistics/Kick-off
0845 – 0900	IA and CIAC Overview
0900 – 0930	Importance of Being an Effective CIAC
0930 – 0945	Break
0945 – 1030	CIAC Support – Pre-Deployment: Phase I
1030 – 1130	CIAC Support – Train and Equip: Phase II
1130 – 1245	Lunch
1245 – 1300	CIAC Support – Boots on Ground: Phase III
1300 – 1330	CIAS Support – Re-Deployment: Phase IV
1330 – 1400	Returning Warrior Workshop (RWW)
1400 – 1430	CIAC NFAAS Overview
1430 – 1445	Break
1445 – 1545	Resources: CIAC & IA Sailor, FFSC/IDSS IA Support, Chaplain Support
1545 – 1615	Conclusion/Survey

Orientation Logistics

NAVY BASE – NORFOLK
Heads
Coffee Mess
Smoking
Snack Machines
Lunch Options
Cell Phones

Orientation Objectives

- ***IA Overview:***
  - ***Definition of Individual Augmentee***
  - ***IA support policy directives, IA Grams***
  - ***4 IA Sailor types of orders***
  - ***4 IA categories***
  - ***Global IA assignment locations***
  - ***4 phases of an IA deployment (the "IA Continuum")***
- ***CIAC & Parent Command roles and responsibilities in support of IA Sailors and their Families:***
  - ***Definition of a CIAC***
  - ***Importance of CIAC & parent command support of IA Sailors***
  - ***CIAC responsibilities in the IA Continuum***
  - ***CIAC resources to facilitate outstanding support of IA Sailors***
  - ***NFAAS and the role it plays in the CIAC's support of IA Sailors & Families***
- ***IA Sailor & Family support resources***
  - ***"One Stop Shop" - Navy IA website: www.ia.navy.mil***

Stakeholders

- U.S. Fleet Forces Command (USFF)
- Commander, Navy Installations Command (CNIC)
  - Navy Mobilization & Processing Sites (NMPS)
  - Fleet & Family Services Center (FFSC)
- Navy Personnel Command (NPC)
  - PERS-4G
- Navy Expeditionary Combat Center (NECC)
  - Expeditionary Combat Readiness Center (ECRC)
- Bureau of Medicine & Surgery (BUMED)
- Commander, Navy Reserve Forces Command (CNRFC)
- Space & Naval Warfare Systems Command (SPAWAR)
- Supported Commands
  - CENTCOM: Commander Task Force – Individual Augmentee (CTF-IA)
  - AFRICOM: Commander Joint Task Force – Horn of Africa (CJTF-HOA)
  - SOUTHCOM: Commander Joint Task Force – Guantanamo Bay (CJTF-GTMO)

IA Overview

IA Defined

- ***IA Gram #5, April 2009 (NAVADMIN 099/09)***
  - ***"An Individual Augmentee (IA) is defined as any Sailor in receipt of individual deployment orders from PERS-4, to include Individual Augmentee Manpower Management (IAMM), Global War on Terrorism Support Assignments (GSA), Mobilized Reserve Component (RC) personnel not mobilized as part of an established commissioned RC unit, or a Health Services Augmentation program (HSAP) personnel."***
  - ***NAVADMIN 171/10, November 2010: Overseas Support Assignment (OSA) replaces GSA (Enlisted only)***
- ***Once in receipt of Orders from PERS-4G, you are an IA***
- ***IAs deploy without the normal organic support a parent command provides***

IA & Family Support Policy Directives

- ***OPNAVINST 1754.6 (April 2009)***
  - ***Personal and Family Readiness Support for IAs and their Families***
- ***MILPERSMAN 1300-318 (October 2010)***
  - ***Screening Procedures for GSA, OSA, IAMM and RC MOB Assignments***

Important IA Grams for CIACs

- *IA Gram #2: GENADMIN 151850ZSEP08*
  - *Common Operating Picture for IA/IA Family Support*
- *IA Gram #3: NAVADMIN 293/08*
  - *Parent Command Assignment and Responsibilities for IA Sailors and their Families*
- *IA Gram #4: NAVADMIN 076/09*
  - *Roles and Responsibilities of Parent Commands, NOSCs, and ECRC for IA Sailors and their Families*
- *IA Gram #5: NAVADMIN 099/09*
  - *Assignment of CIAC*

IA Sailor Types of Orders

- ***IAMM: Individual Augmentee Manpower Management***
- ***OSA: Overseas Contingency Operations (OCO) Support Assignment***
- ***GSA: Global Support Assignment***
- ***RC MOB: Reserve Component Mobilization***

IA Categories

- *Joint Manning Document (JMD)*
- *Ad-Hoc Unit*
- *RC Unit Mobilization*
- *Service-to-Service Augment (S2S)*

Global Navy IA Locations

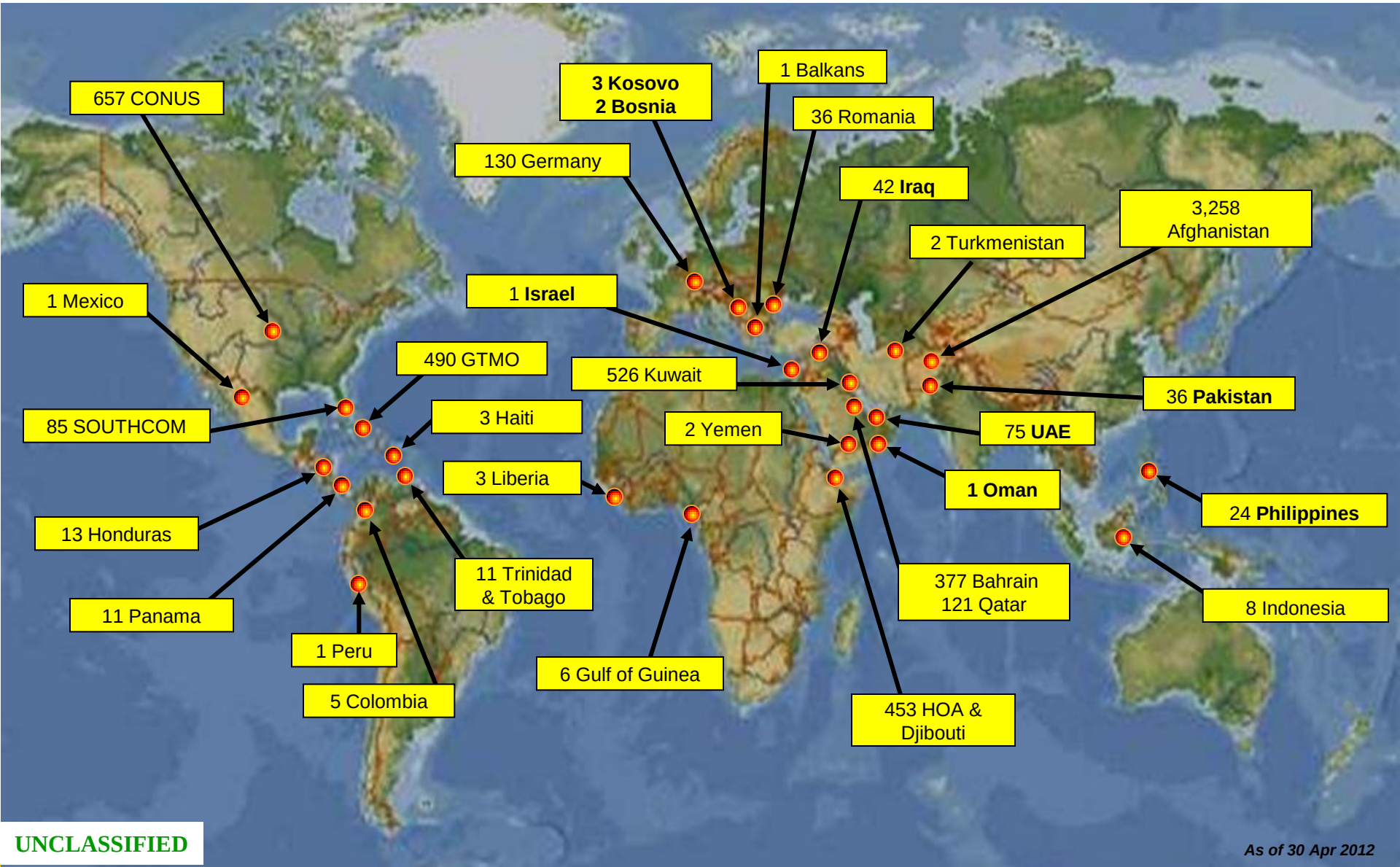

UNCLASSIFIED

As of 30 Apr 2012

IA Continuum

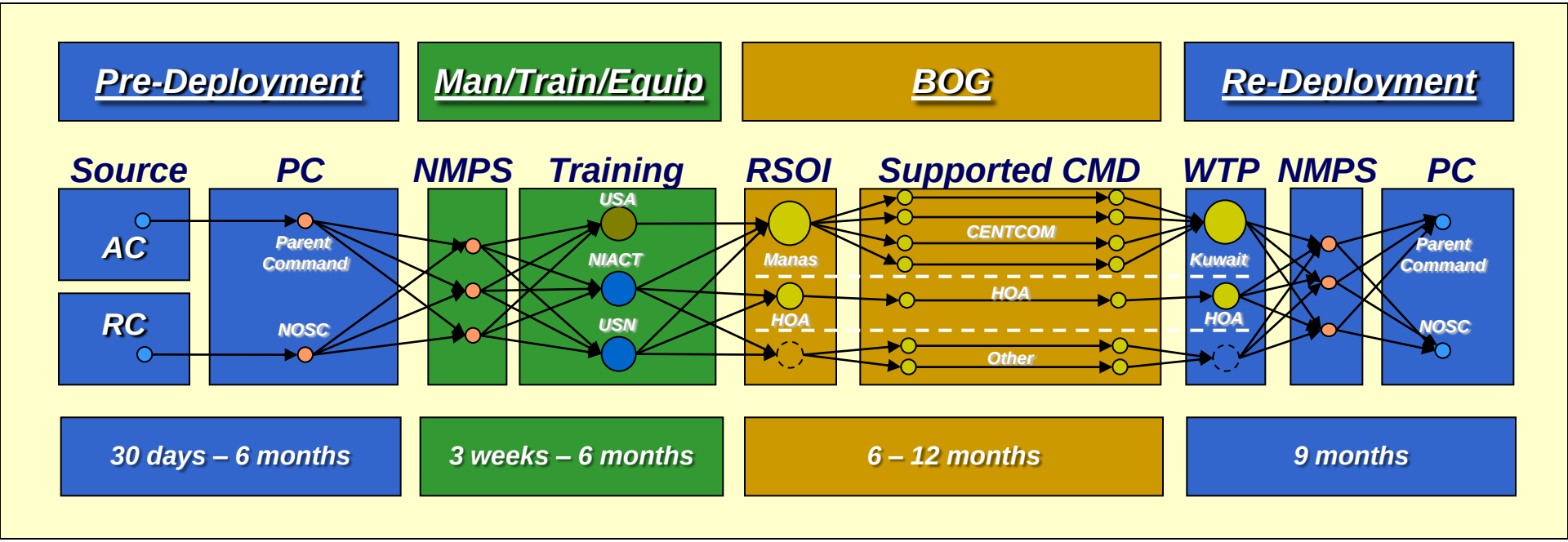

Definition of a CIAC

CIAC Defined

- ***The Command IA Coordinator (CIAC) is the individual assigned by the Commanding Officer or Officer in Charge to provide support to the IA Sailor and Family throughout the IA Continuum***
  - ***Acts as a mentor, advocate and professional source of information for the IA Sailor before, during and after an IA assignment***
  - ***Should be an E-7 or above, preferably with previous IA experience***
  - ***Must have personal initiative and command support to be successful***
- ***All Navy commands with Sailors on IA Orders awaiting to depart, currently on IA assignment or having returned from IA assignment within the last 9 months must have a CIAC designated in writing by the CO or OIC***
  - ***All NOSCs must have designated CIACs to support RC IA Sailors assigned to lower echelon RC units***

Importance of CIAC Support of IA Sailors

IA Comments

Why IAs Need Effective CIAC Support

Four Star Hotel?... NOT!!!

"Hospital Facilities"… MASH Style

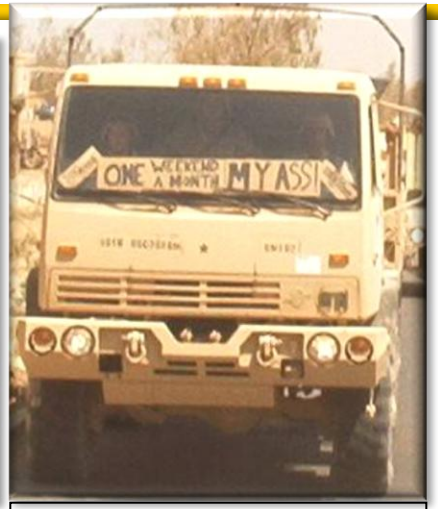

ONE WEEKEND A MONTH MY ASS!

"Internet Café" facilities…

"Hit the deck… and take cover!"

If you can't make much out of this photo, I'm not surprised. I couldn't see much either when I was lying on my belly a few hours ago. We were enjoying lunch at the dining facility (the "DFAC") when the foreboding alarms went off, alerting us of an incoming rocket. As we have been instructed, we all hit the deck, covering our heads. One does this for several minutes and then seeks out a bomb shelter or "hardened" building.

Why IAs Need Effective CIAC Support

- ***Sailor Comments from USFF Post Deployment Surveys***

I keep trying to forget this whole thing ever happened, but it keeps getting brought back up. Nobody cared that I left, and nobody cared that I came back, with the singular exception of my Chief, and nobody told him what to do either. If there was a crack to fall through, I fell through it. Throughout my entire deployment and for six months afterward, I had no idea who my CIAC, or if I even had one (I didn't). A chief called me in August (7 months after I returned) claiming to be my CIAC, but who needs a CIAC half a year after they get back from an IA? He was about a year and a half late.

- AC, E4-E6, CENTCOM

My Command CIAC was OUTSTANDING!!! We had a natural disaster that affected our home and the CIAC went above & beyond to help out my family

- RC, O3-O4, Afghanistan

The main reason my IA experience was unpleasant was because for the first 8 months I was in Iraq I never heard from my parent command or my CIAC. At the 8 month mark we got a new IA coordinator that contacted me and seemed like he genuinely cared.

- AC, E4-E6, Iraq

CIAC sucked, all I received were nasty grams about make contact. Reserve unit never contacted my family. I initiated most contacts with them.

- RC, O5-O6, Afghanistan

My CIAC never communicated with me and I had to reach deeply into my command to find out my redeployment time frame for checking in getting liberty. No one, save my DIVO from back home, made an effort to get me information and I continued to receive NFAAS emails every 1-2 weeks that said my CIAC was not inputting data on me. I received word from her only after 3 weeks and 3 emails, and she emailed me one week before I was due back in the US just to say there was nothing else for her to do. I didn't need the support, but I needed information and it wasn't available without digging deeply. Unsatisfactory.

- AC, O1-O2, Kuwait

I felt taken care of administratively the whole time I was deployed, i.e., I never felt like anyone had forgotten about me. My parent command made an effort to reach out and I was able to get follow-on orders easily.

- AC, O3-O4, Iraq

YOU Absolutely Make The Difference!

Break

CIAC Responsibilities in the IA Continuum

The IA Continuum

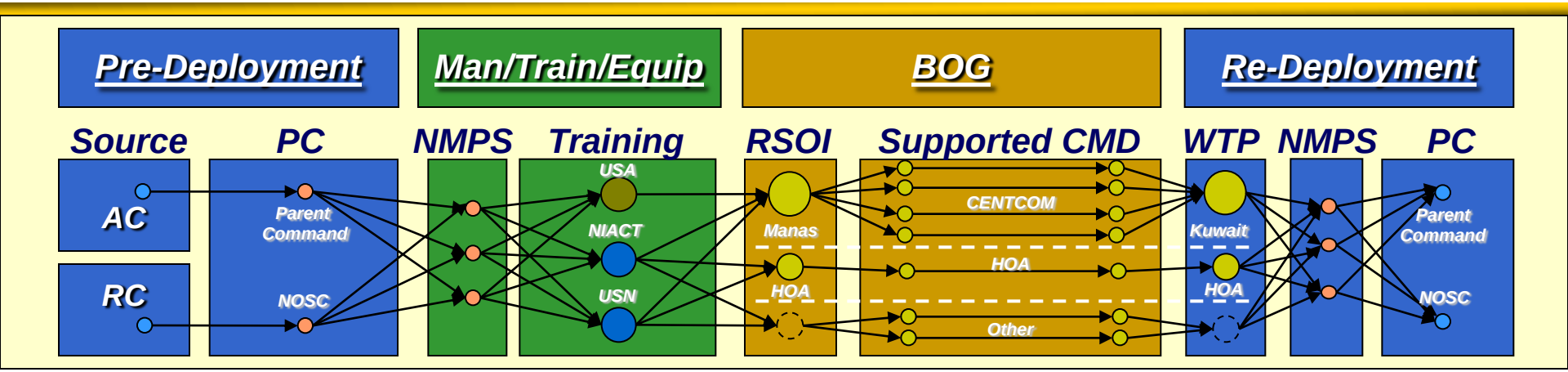

Stakeholders

PERS-4G
CIAC
USFF
ECRC
BUMED
CNRFC
FFSC
NFAAS

CNIC
NMPS
BUMED
CIAC
ECRC
USFF

CIAC
Navy Component Command (NAVCENT, NAVAF, NAVSO, NAVEUR, PACFLT)
FFSC
NFAAS

WTP
ECRC
NMPS
CIAC
BUMED
CNRFC
FFSC
NFAAS

CIAC support throughout the Continuum is vital to a successful IA tour!!!

Pre-Deployment Phase

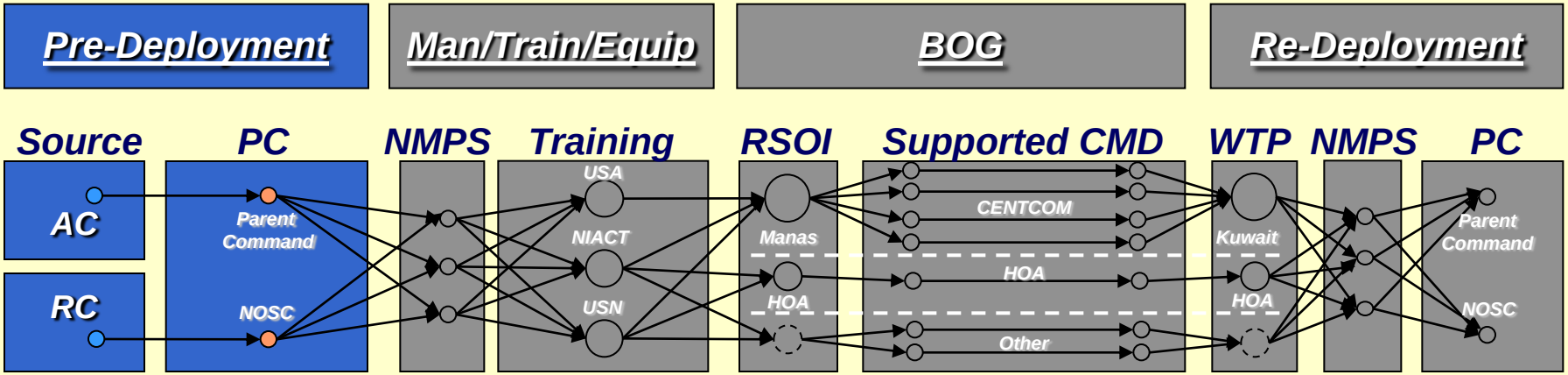

Your support is crucial during the Pre-Deployment Phase!

CIAC's Role

- ***Prepare the Sailor and Family for upcoming IA assignment***
- ***Read and explain orders with IA Sailor***
- ***Facilitate, monitor and ensure completion of all IA screening checklists:***
  - ***Coordinate with IA Suitability Screening Coordinator (medical POC for IA deployment requirements)***
  - ***Ensure Sailor is provided time to complete checklist requirements***
  - ***Notify command immediately of any problems***

CIAC's Role (cont.)

- *Assist in Family preparation*
  - *Determine Family's plans during IA deployment (remain local, move in with family/friends, etc.)*
  - *Provide Sailor a Family Handbook*
  - *Ensure DEERS and TRICARE info are current*
  - *Encourage Sailor/Family attend FFSC pre-deployment briefs*
  - *Provide Sailor/Family with info on other support services (CO, CMC, CIAC, Ombudsman, Chaplain, Family Readiness Group, FFSC, IDSS)*
- *Begin management of Sailor's IA record in NFAAS*
  - *Ensure Sailor updates personal/family contact info in NFAAS*
  - *Explain NFAAS and its role in documenting Sailor/Family contact*
  - *Determine Family's desired contact interval (daily, weekly, monthly, emergencies only, other)*
  - ***Document all actions in NFAAS***

View IA Orders in BOL

BUPERS Online - BOL - Microsoft Internet Explorer provided by NMCI

File Edit View Favorites Tools Address https://secure.bol.navy.mil/menu.aspx Links

BUPERS Online

[Application List] [Update Info] [Change Password] [Help] [FAQ] [Comments] [Privacy Policy] [Sign Out]

6:09:10 PM Wed. Jun, 16 - 2010 For help call 1-800-951-NAVY Bureau Of Naval Personnel Online User Logged in: CULHANE JAMES R

BOL Application Menu

[Application List]
[Update Info]
[Change Password]
[Help]
[FAQ]
[Comments]
[Privacy Policy]
[Sign Out]

[Advancements/Selection Boards]
[Application (FORMAN) Status]
[ARPR/ASOSH Online]
[Configuration Management]
[Exchanges Of Duty (SWAPS)]
[FITREP/Eval Reports]
[Individual Medical Readiness (IMR) Status]
[Military Locator System]
[NavPers Legacy & Itempo]
[Navy Diversity Calendar]
[Navy Personnel Command]
[Navy-Marine Corps Mobilization Processing System (NMCMPS)]
[ODC, OSR, PSR, ESR]
[Overseas / IA Screening]
[Personnel Action Request 1306/7]
[PRIMS]
[Request Record on CD]
[Selection Board Member/Recorder Training]
[Selective Reenlistment Bonus]
[Update Race/Ethnicity Preference]
[View IA Orders]
[View Orders]
[Web Enabled Record Review]

Click on any information icon to the right of a menu item to see additional information about that application.

Version: 3.2 Rev. 3154 Build 23465

Internet

View IA Orders

IA Suitability Screening

- ***MILPERSMAN 1300-318 contains all IA screening requirements***
- ***BUMEDINST 1300.3 contains IA medical/dental screening requirements***
- ***Screening Checklists***
  - ***NAVPERS 1300/22 (Expeditionary Screening Checklist)***
  - ***NAVPERS 1300/21 (Medical Suitability Certification)***
  - ***NAVMED 1300/4 (Expeditionary Medical & Dental Screening for IA and Support Assignments to OCO)***
- ***CO/XO report ESC and IA suitability screening completion via BUPERS Online (BOL)***

NAVPERS 1300/22

- *Administrative Expeditionary Screening Checklist (ESC)*
- *Checklist highlights:*
  - *Qualification review:*
    - *Proper skill set for mission*
    - *Career issues which could impact IA assignment (OBLISERV, HYT, PTS, dwell, etc.)*
    - *Performance issues which could impact IA assignment (FITREP/EVAL)*
  - *Career management*
    - *Transfer worksheets/exams to BOG IA Support agency*
    - *SRB*
    - *PRD adjustments*
  - *Valid Security Clearance for mission*
  - *ISOPREP*
  - *Passport up to date*
  - *Valid Government Travel Credit Card*
  - *Navy e-Learning required course list*
  - *Pay issues*
  - *Legal issues*
  - *PFA issues/PRIMS transfer to IA status*
  - *Family Readiness (Page 2, DEERS, SGLI, NFAAS info, etc.)*
- *Checklist must be complete within 30 days of receipt of orders**
- *Requires CIAC, Legal Officer, CMC/SEA and CO/OIC signatures*
- *Must be archived by the CIAC for 2 years*

*** Some items will be completed later due to medical requirements**

NAVMED 1300/4 & NAVPERS 1300/21

- ***NAVMED 1300/4***
  - ***Medical & Dental screening checklist***
  - ***Checklist highlights:***
    - ***Record screened for Medical Readiness***
    - ***Audiogram / Eye examination***
    - ***Immunizations (General and AOR specific)***
    - ***Labs***
    - ***Medications (appropriate supply for deployment duration)***
    - ***Some items may not be completed until w/in 60 days of deployment***
    - ***Directs completion of Pre-Deployment Health Assessment (DD 2795)***
      - **Must be completed by, but no earlier than 60 days prior to the deployment date**
      - **Must be documented in Medical Readiness Reporting System (MRRS)**
    - ***Interview with health care provider***
    - ***Waivers***
    - ***Dental screening***
  - ***Must be documented in MRRS***
- ***NAVPERS 1300/21***
  - ***Certification by medical provider that member is medically qualified for IA assignment***
  - ***Must be provided to the CO***
  - ***Must be archived by the CIAC for 2 years***

Expeditionary Medical Screening

- **CIAC responsibilities**
  - Ensure IA Sailor completes medical suitability screening at MTF/DHC
  - Coordinate with IA Suitability Screening Coordinator (IASSC)
  - Ensure CO reports suitability within 30 days of orders notification

Step 1
- CIAC Schedules Appointment with MTF/DHC via IASSC

→

Step 2
- Sailor meets with IASSC for preliminary screen/checklist

→

Step 3
- Sailor completes medical requirements (labs, immunizations, provider interview)

↓

Step 4
- MTF representative signs completed 1300-21 (medical suitability cert)

→

Step 5
- Sailor provides signed 1300/21 to CIAC (retain copy)

→

Step 6
- CO reviews signed 1300/21 & reports suitability via BOL

Average 2-5 days to complete

IASSC: MTF/DHC representative for IA medical suitability screening questions
- AOR specific requirements
- Special cases, waivers, etc.

Provider: Nurse practitioner, Physician's Assistant, or Medical Officer
- Conduct screening interview/update MRRS

CO/XO IA BOL Suitability Screening

Suitability Screening Reporting

IA Screening Timeline

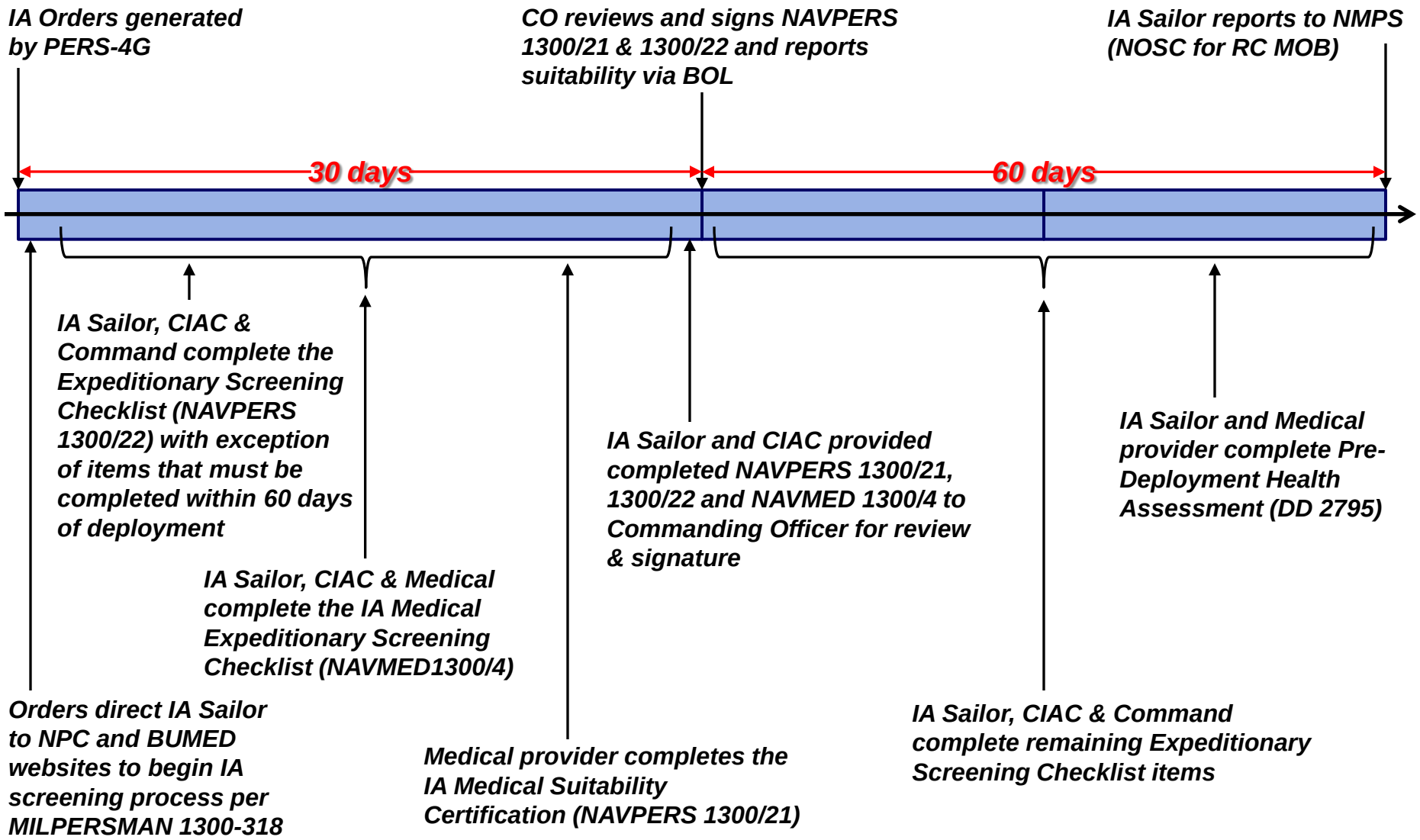

Pre-Deployment Phase Completion

- ***Sailor has all IA related documents (to include screening checklists) in their possession***
- ***IA Sailor's Family is prepared for upcoming deployment***
- ***Command internalizes ownership of IA Sailor and Family for duration of IA assignment***
- ***Command conducts appropriate send-off for IA Sailor and Family***
  - ***Face-to-Face with Family***
  - ***All contact info is up to date***
- ***Next stop: NMPS***

Training & Equipping Phase

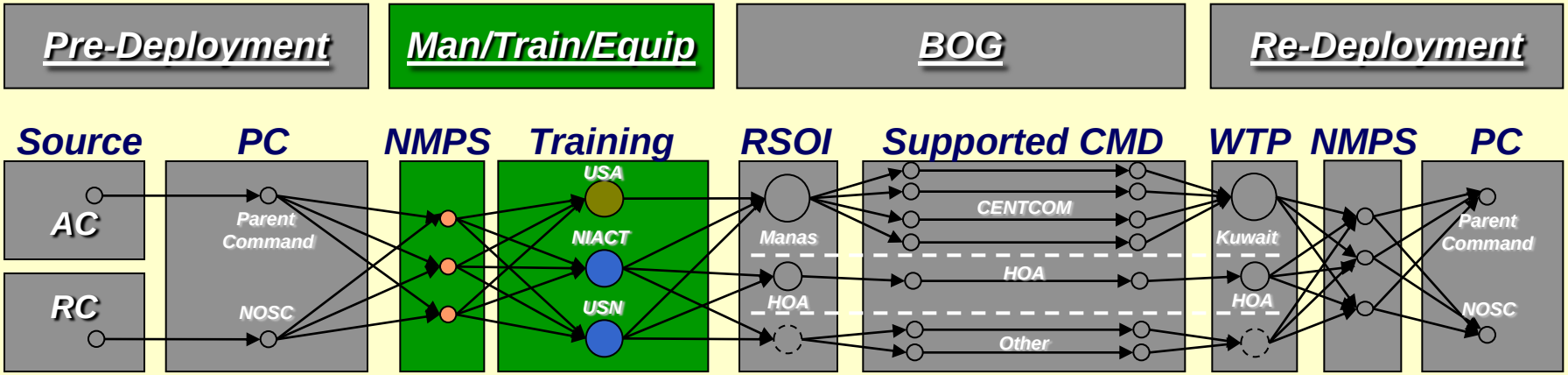

Your support is imperative during the Training & Equipping Phase!

CIAC's Role

- ***Support the IA Sailor with resolution of any Sailor or Family issues that arise during NMPS or CONUS Training***
  - ***Report issues to chain of command***
  - ***Coordinate with IDSS for resolution***
  - ***Inform ECRC as appropriate***
- ***Continue monthly contact and documentation in NFAAS***
- ***Update IA's contact info in NFAAS info every time they change duty stations during the Training Phase***
- ***Administrative Responsibilities***
  - ***Parent Command: IAMM, OSA and RC MOB***
  - ***ECRC: GSA***

NMPS Overview

- ***Three Primary NMPS Locations: Norfolk, San Diego & Gulfport***
- ***Report to NMPS Norfolk in the uniform of the day***
- ***Bring***
  - ***Orders with command check-out stamp***
  - ***Completed Expeditionary Screening Checklist (1300/22)***
  - ***Medical & Dental Records (with Completed Expeditionary Medical Screening Checklist (1300/4)***
  - ***2 pair of prescription glasses (current prescription)***
  - ***90 day supply medication***
  - ***Updated Page 2 & SGLI***
  - ***Activated Government Travel Card (GTCC)***
  - ***Certificates for pre-requisite NKO/Navy e-Learning training***
  - ***All prior DD-214s (RC Sailors only)***
  - ***Blank & voided checks (RC Sailors only)***
- ***Do not bring***
  - ***More than you can carry***

NMPS Function

- ***Expeditionary Screening Checklist (1300/22)***
- ***Expeditionary Medical Screening Checklist (1300/4)***
- ***Additional administrative and medical processing***
  - ***Completion of Pre-Deployment Health Assessment (DD 2795) if not already complete***
- ***Pre-Deployment briefs***
  - ***Chaplain***
  - ***Legal***
  - ***Expeditionary Combat Readiness Center (ECRC)***
  - ***Personnel Support Detachment (PSD) (RC Sailors only)***
  - ***Career Information***
  - ***Operational Stress Control***
  - ***Sexual Assault Prevention And Response (SAPR)***
  - ***Navy Marine Corps Relief Society***
  - ***Fleet Family Support Center (FFSC)***
  - ***TRICARE (RC Sailors only)***
  - ***Travel Brief & Travel Claims***
- ***Uniform & Gas Mask fitting and issue***
- ***Program Management: CNIC***
  - ***NMPS Website for Norfolk, San Diego & Gulfport***

Expeditionary Combat Readiness Center

- **Primary Missions**
  - Train and Equip Individual Augmentees
  - Provide Support to IAs and their Families

- **Family Readiness/CIAC Support**
  - ecrc.fs.fct@navy.mil
  - 1-877-364-4302 (24 hour hotline)

- **Ops Help Desk**
  - ecrc.hq.fct@navy.mil
  - 757-462-4744 x119

CONUS Army Training

- **Combat Skills**
  - **Navy Individual Augmentee Combat Training (NIACT)**
    - 17 days at FT Jackson, SC
    - Minimum training required to enter CENTCOM AOR
    - ECRC staff (LNOs) on site
  - **FT Dix, NJ / FT Bliss, TX**
    - 1st Army oversight/trainers
    - 30-45 days depending on the mission requirements.
    - ECRC staff (LNOs) on site
  - **FT Polk, LA**
    - TRADOC (US Army)
    - ~60 days for all Embedded Training Teams (ETTs).
    - ECRC staff (LNOs) on site
  - **Camp Atterbury, IN**
    - 1st Army oversight/trainers
    - Provincial Reconstruction Teams (PRTs)
    - 3-6 months of individual/billet-specific and basic combat skills training
    - ECRC staff (LNOs) on site
  - **Topics include**
    - Intro to the Army / Army Values
    - Weapons qualifications
    - First Aid / Combat Life Saver
    - Land Navigation
    - Convoy training
    - Personnel recovery
- **Mission-Specific Training**
  - Various combinations of training at different CONUS locations based on specific IA assignment
- ****Check orders for training I-Stop locations, duration, & sequence****

CONUS Training Map

FY-11 Total: 7537

FY-12YTD Total: 3192

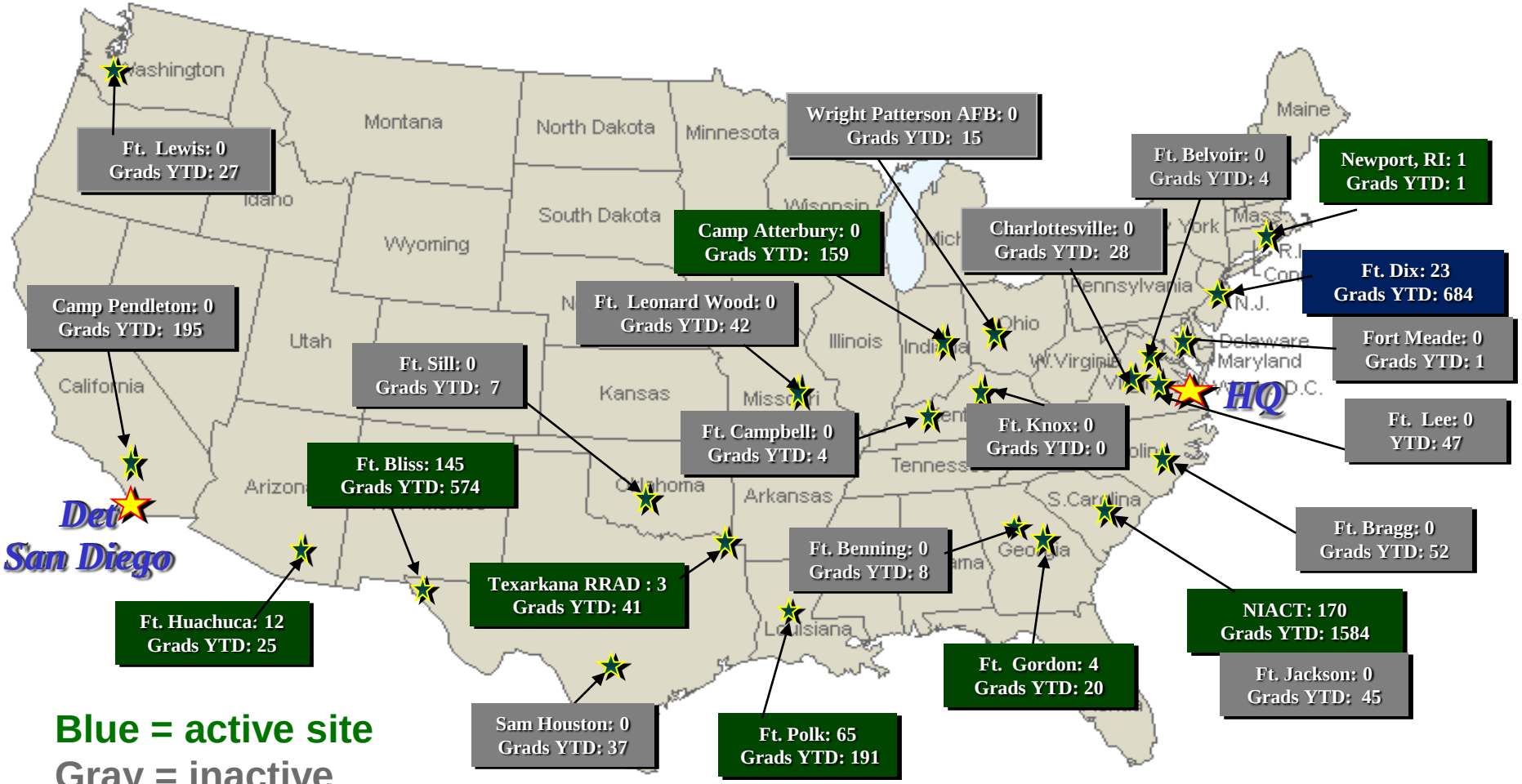

Blue = active site

Gray = inactive

Training on 1st Army Installations

- Training environment designed to replicate the deployed environment
- Many Restrictions
  - General Order #1 (1st Army sites only)
    - No alcohol
    - No off-base liberty
    - No civilian clothing
  - No personal vehicles
  - No family visits while in training
- The "Army way" is different from how the Navy conducts business
  - Cultural differences
  - Differences in paygrade authority
  - ECRC has detachments at most CONUS Army Training sites to facilitate issue resolution
    - Navy Officer (O5/O4) / SEA (E7/E8) present as a liaison between Navy students and Army trainers.

Training Phase Completion

- ***IAs depart final CONUS training site and travel to theater via airlift (AMC military or charter flight)***
  - ***Sailors in training for >45 days with deployment orders of at least 179 days are authorized a pre-deployment I-Stop back to parent command (leave)***
    - ***Usually 8-10 days***
    - ***Theater travel date ultimately dictates length of leave***
    - ***Site LNOs will coordinate travel w/ECRC HQ staff***
    - ***Standard leave for those electing to travel to locations other than parent command (e.g. Sailors pay their own way to/from training site)***
- ***Arrive at Reception, Staging, Onward Movement & Integration (RSO&I)***
  - ***NAVCENT FWD HQ Manas, Kyrgyzstan for Afghan deployers***
  - ***Kuwait for CENTCOM/non-Afghan deployers***
    - ***Boots On Ground (BOG) counter starts***
    - ***Additional briefings, acclimation, and administrative processing***
    - ***Transportation to ultimate duty station***

NIACT
(Navy IA Combat Training)
Fort Jackson, SC
Video

Lunch

Boots on Ground (BOG) Phase

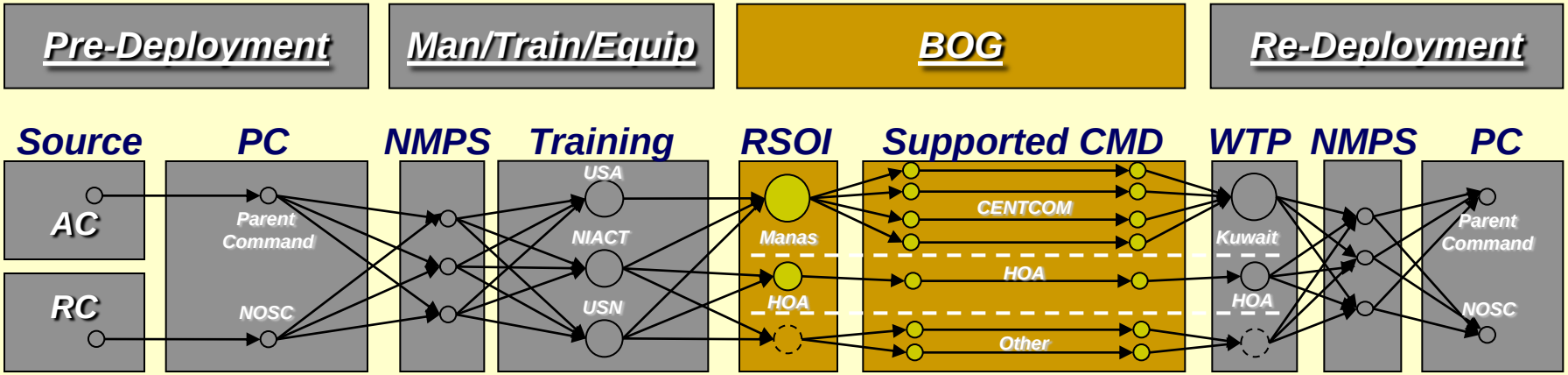

Your support is essential during the BOG Phase!

CIAC's Role

- Support the IA Sailor with resolution of any Sailor or Family issues that arise while BOG
- Obtain in-theater contact info and update NFAAS & command social roster
- Keep command informed on the IA Sailor's activities & well being
- Maintain contact with IA and Family
  - Do not let the IA Sailor feel forgotten or abandoned by the parent command
  - Document contact with IA Sailor and Family in NFAAS
- Keep Family involved in command activities (official and social)
- As Re-Deployment date approaches
  - Keep command informed of any changes to re-deployment orders
  - Schedule FFSC pre-return brief for Family (if desired)
  - Plan welcome home event for IA Sailor and Family

CIAC Effectiveness: BOG Phase

- ***Sailor Comments from USFF CIAC Support Survey***

I was provided a boilerplate monthly email from someone who was allegedly my CIAC but when I tried to respond for assistance with an issue that I needed to deal with, I got an auto-response email indicating that person no longer worked there.

- RC, O5-O6

Helped facilitate my wife in obtaining a new ID card after it was lost at the airport.

- AC, E4-E6

I never heard from my CIAC and when I contacted him about an E-7 exam waiver it was like pulling teeth trying to get answers.

- RC, E4-E6

The CIAC assisted my wife with pay issues when contract errors resulted in my family being dropped from TRICARE 6 months before my return. CIAC kept in touch with me on these issues.

- RC, E7-E9

I have been IA for almost 3 months and have yet to receive contact that was initiated by my CIAC. I have been waiting for a travel claim for 3 months. Every time I speak to my CIAC, they are very rushed and have total lack of knowledge on the status of my requests

- AC, E4-E6

My previous command remains in contact and makes me feel like my family is taken care of while I am away. I am a GSA and it feels like I have not left my parent command. My command has taken an active role in supporting my family, which has reduced the stress of this deployment immeasurably.

- AC, O3-O4

My CIAC is very much involved in assisting me during my deployment. Always checks with me to see if there is anything I need or if I have any questions or concerns. Very helpful! Made sure my family has all important information and resources pertaining to my deployment. CIAC program is excellent and makes me feel like I'm truly being taken care of.

- RC, E4-E6

YOU Absolutely Make The Difference!

BOG Support

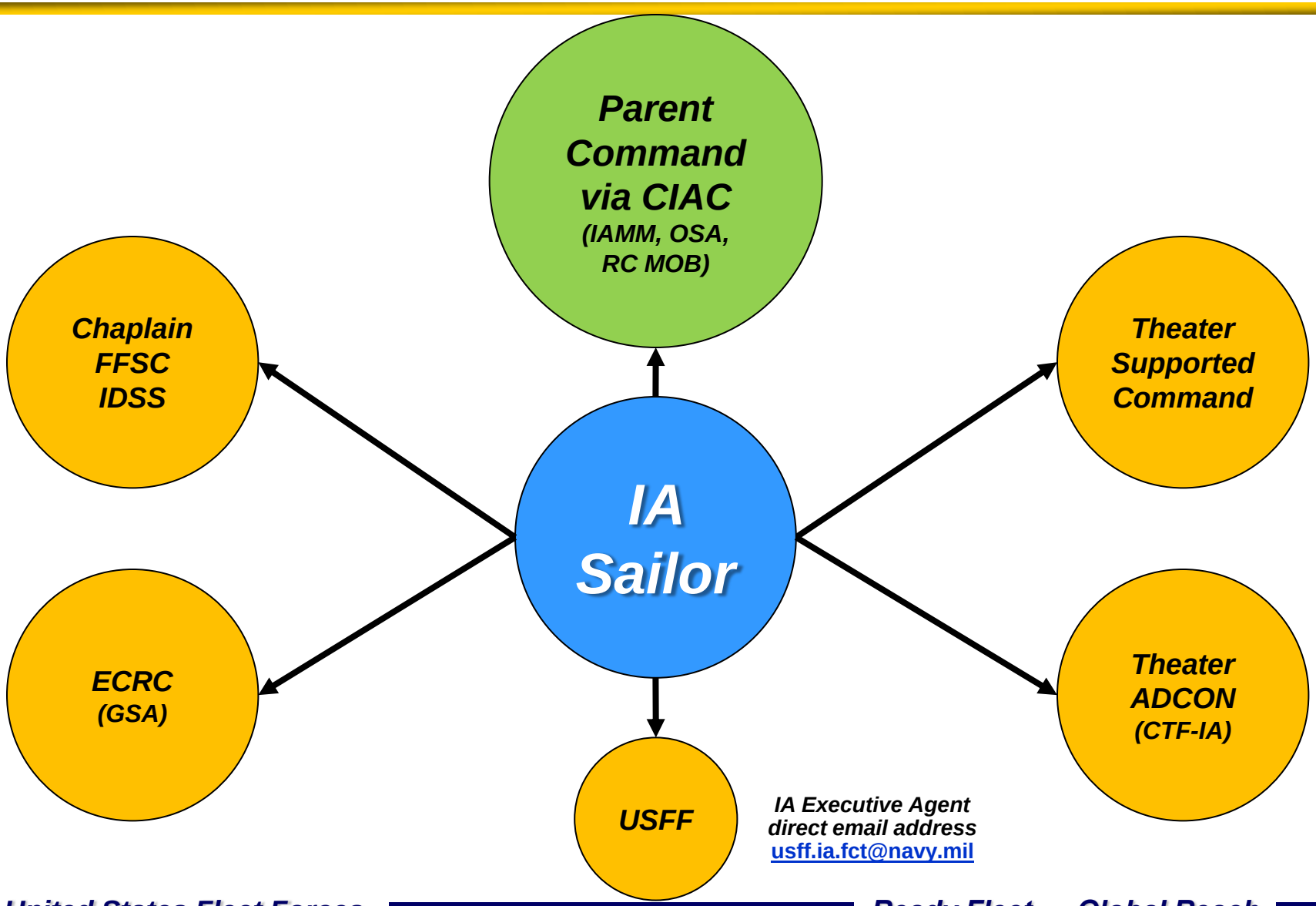

IA Executive Agent direct email address
usff.ia.fct@navy.mil

Re-Deployment Phase

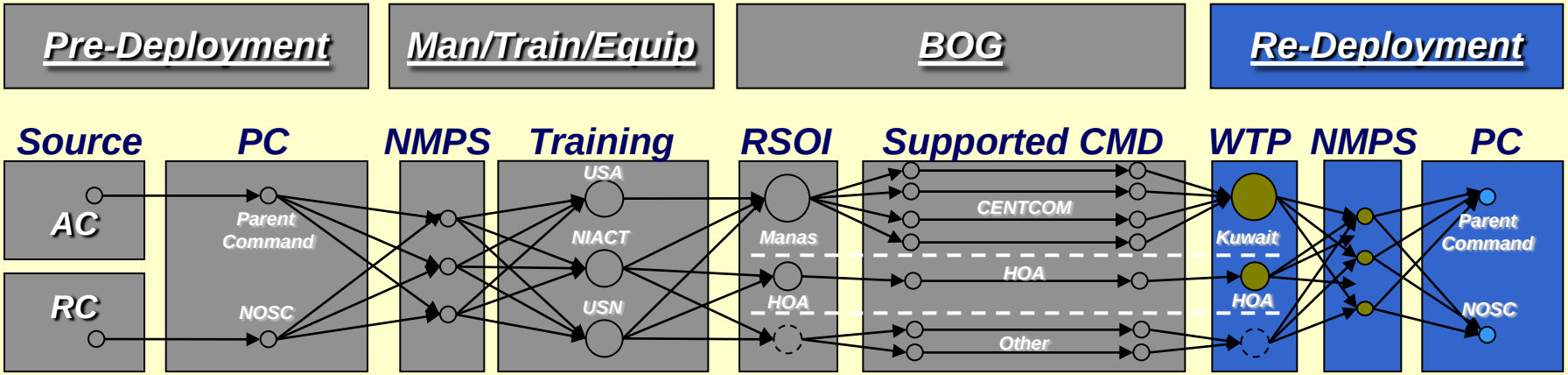

Your support is critical during the Re-Deployment Phase!

CIAC's Role

- ***Support the IA Sailor with resolution of any Sailor or Family issues that arise after return from IA assignment***
- ***Ensure IA greeted at airport by command representative***
- ***Coordinate Welcome Home ceremony for returning IA Sailor***
- ***Coordinate IA Sailor's Leave with command's schedule***
- ***Coordinate IA Sailor's reintegration into the command***
  - ***Training***
  - ***Mission Readiness***
  - ***Upcoming deployment/detachment/work-up schedule***

CIAC's Role (cont.)

- **Enter Re-Deployment date in NFAAS**
  - **Continue to track IA until 9 months after Re-Deployment date**
  - **Execute CIAC-to-CIAC positive hand off if IA Sailor transfers to a new parent command**
- **Track completion of required items with IA Sailor and command:**
  - **Post-Deployment Health Assessment (PDHA, DD 2796)**
  - **Post-Deployment Health Re-Assessment (PDHRA, DD 2900)**
  - **Follow-on medical referrals**
  - **Document completion in NFAAS**
- **Encourage participation in reintegration events such as Returning Warrior Workshop (RWW)**

Re-Deployment Phase Timeline

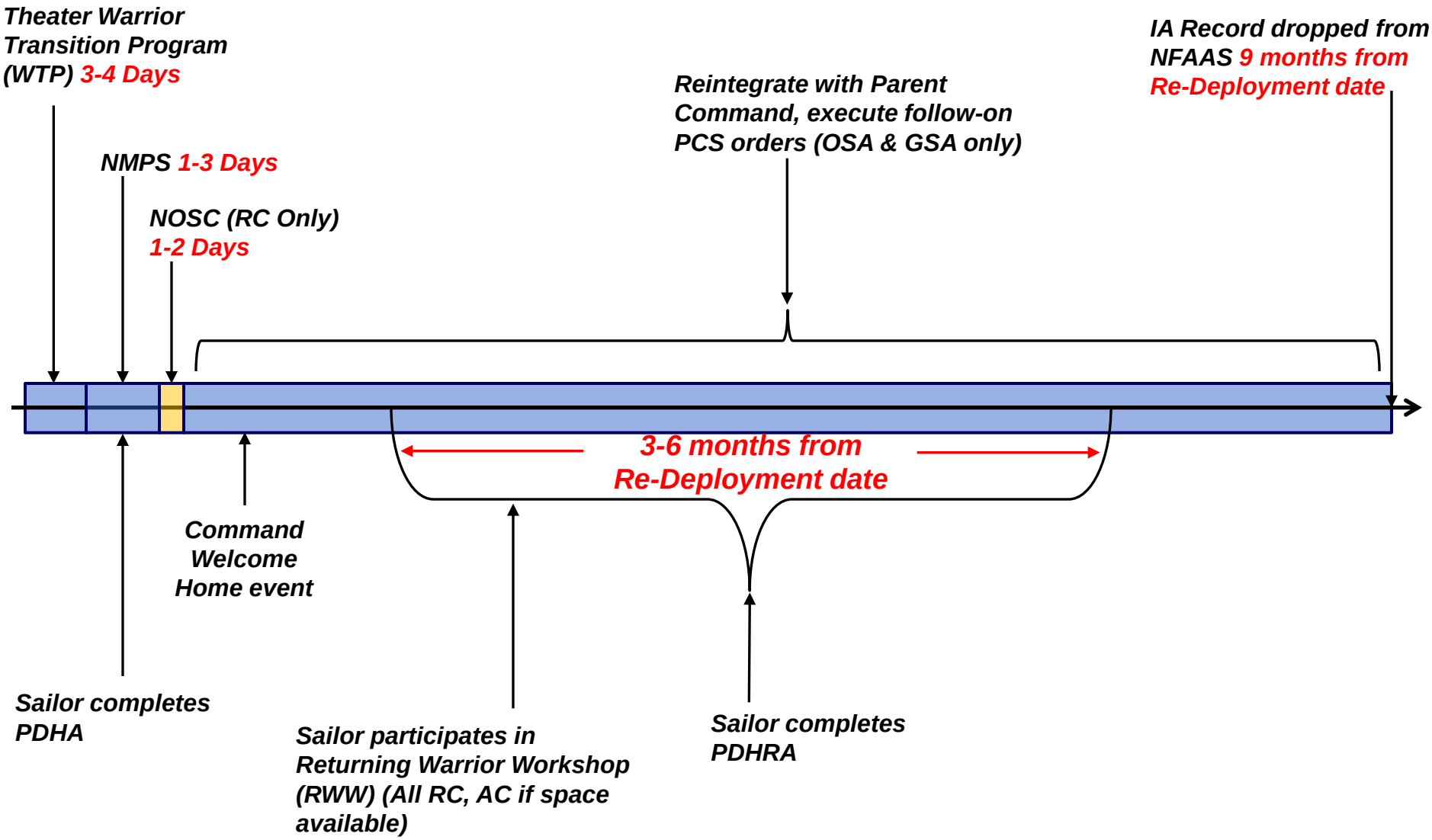

Redeployment Process

BOG	Re-Deployment		
Supported CMD	**Warrior Transition Process**	**NMPS**	**Parent CMD**
CENTCOM AOR Individual Augmentees	Weapons turn in Navy Re-assimilation Optional Provider appointment Optional counseling OSC forums CONUS resource awareness RWW awareness Family and CIAC contact Return logistic support (travel)	PDHA and Lab work Medical / mental health referrals Post -Deployment surveys OSC forums Resource awareness RWW awareness Family and CIAC contact Return logistics support (travel, lodging) Legal, Admin issues	Command R3 * program: Welcome Home Reintegration events and programs (RWW) PDHRA and referrals if needed Family, Command, and Community reintegration resources
AFRICOM AOR/HOA Individual Augmentees			
Other Individual Augmentees			

*R3 = Return, Reunion & Reintegration

Returning Warrior Workshop (RWW)

CIAC NFAAS Overview

NFAAS Role in IA and Family Support

- ***CIAC***
  - ***Commanding Officer Representative (COR) grants CIAC access to NFAAS***
  - ***CIAC NFAAS training available monthly via Defense Connect Online (DCO)***
  - ***Monthly contact with IA must be documented in NFAAS***
- ***Individual Deployment Support Specialist (IDSS)***
  - ***Monthly contact with Families must be documented in NFAAS***
    - ***Requirement is in addition to CIAC monthly contact with Family***
- ***Information entered in NFAAS must be accurate & complete***

NFAAS Data Sources

NFAAS Homepage

NFAAS | NAVY FAMILY ACCOUNTABILITY and ASSESSMENT SYSTEM

Navy Military, Civilians, OCONUS Contractors, and their Families

To update your contact information and account (muster)

Click Here

Includes Active Duty, all Reservists, Navy Civilian Employees, NAF and NEX Employees, and their Family Members, as well as OCONUS Contractors affected by an event.

Note:IRR Reservists and contractors in the Continental U.S. can NOT login at this time.

All Navy Support, Authorized Personnel and Staff

(must have been granted access by command)

Click Here

CIAC Low bandwidth

(CAC Required for Access)

To perform duties for COR, Command & Regional Admin, Personnel Accountability, Analysis & Reporting, Case Management, IA Support & tracking and other related tasks.

Login Problems

If you have problems accessing NFAAS, click here to send an email for assistance. Please include your name, phone number and UIC (if possible) in order for us to contact you. **Please, do NOT include SSN/DOB.**

What is NFAAS?

Navy Family Accountability and Assessment System (NFAAS) standardizes a method for the Navy to account, manage, and monitor the recovery process for personnel and their families affected and/or scattered by a wide-spread catastrophic event. The NFAAS provides valuable information to all levels of the Navy chain of command, allowing commanders to make strategic decisions which facilitate a return to stability.

NFAAS allows Navy Personnel to do the following:

- ✔ Report Accounting Status
- ✔ Update Contact/Location information
- ✔ View Reference Information

CIAC NFAAS Training

NFAAS | NAVY FAMILY ACCOUNTABILITY and ASSESSMENT SYSTEM

Logout

CIAC\Training Low Bandwidth

Home | Command | Command | UIC Admin | Personnel | DADT Repeal Trng | Cmd IA Files | Accounting | Reports | Reference | My Info | Upload | Data | Help

Announcements

Per NAVADMIN 275/11 all navy personnel have been requested to Verify/Update their Address and Contact information in NFAAS.

To successfully accomplish this there are a couple of tasks you should be performed on the "MY Info" tab of each person's "Full Profile". Each of these steps should be performed on the "Contact Information" section **AND** the "Family Member Info" section.

Review Address and Contact (email/phone) information (on the "Contact Information" Section and the "Family Member Info" Section)

- 1. If everything is correct click the "Verify Info as Current" button. (Should be done for each family member too)
- 2. If the information is incorrect please click the "Edit" button and correct the information and save it. (If family member data is the same as make sure to click the checkboxes for all that the information applies to)

Unfortunately, address information can **ONLY** be Verified and/or updated when logging in with **CAC or Username and Password.** If "Personal Information" was used to login only their contact information will be updated and it **WON'T** verify(track) that their address information is correct. So, please encourage them to login with one of the other methods and follow the steps above.

NFAAS 101 ECM and IDS TRAININGS ARE NOW AVAILABLE ONLINE!

NFAAS 101 ECM and IDS training are now available online in the 'Training' section to the right or by clicking here. After completion of this training, ensure you complete the survey and send a copy of your training certificate to your respective RCM/RIDSC.

Online Training

Scroll down to see our upcoming Online training sessions. **No registration is required**, just login to DCO prior to the meeting time.

Audio Dial-in: **866-780-0335** passcode: 5653510#
Note: Audio will **only** be on the phone conference which is limited to 100 connections filled on a first-come/first-served basis!

CIAC Training

Wednesday, 30 Nov. 2011
1300-1430 Eastern Time - Login to DCO here

Fleet and Family Services Training

Emergency Prep Resources

The resources listed below provide additional information about preparing yourself and your family for an emergency

- **Operation Prepare (www.cnic.navy.mil):** Emergency planning information and tools for all Navy personnel.
- **Fleet & Family Support Center (www.ffsp.navy.mil):** Programs and services to support sustained mission and Navy readiness.
- **American Red Cross (www.redcross.org):** Preparedness guides and information for home, school, work and community.
- **Ready.Goy (www.ready.gov):** Information, checklists and printable forms to educate and empower Americans to prepare for various emergencies.

24-Hour Navy Emergency Coordination Center:
1-877-414-5358 or 1-866-827-5672
ECRC 24-Hour IA Family Helpline:
1-877-364-4302
NFAAS Help Desk:
1-866-946-9183 or 1-619-553-8167

Hot Topics

Navy IA Website
Provides Sailors, Families, Commands and Employers a comprehensive one-stop mobilization resource including the latest IA Grams.

Sailor NFAAS Record

Close | Details for IA File: 75491(Returned) | Actions: Choose One | Help | Command IA Coordinator: Adsit, William C JR

NFM Personal Info (Help) — More Contact Data

Name:	Training, Charlie Alpha	Work:	555-555-5556
Rank/Rate:	E4	Cell:	555-555-5554
Command:	NNNNN - NO UIC Assigned	Email1:	ctraining@noemail.com
In-Theater Email:	ctraining@Afghan.SWA.Army..mil	Email2:	ctraining@Afghan.SWA.Army.COM

IA Preferred Contact Info (Help)

Name:	Susie Training	Home:	555-555-5555
Relationship:	Spouse	Work:	
Location:	Chesapeake, VA	Cell:	555-555-5555
		Email1:	alkentch@gmail.com
		Email2:	

Command IA File Information (Help) — Edit

Command IA Coordinator (CIAC) Contact Info — CIAC: Adsit, William C (bill.adsit@intelesistech.com, 619-553-9017)

Last Sailor Contact: 10-20-2011 13:37 UTC-4 (Auto Updated)	Next Sailor Follow Up: 11-20-2011 (Auto Updated)	Sailor Contact Interval: Every Month
Last Family Contact: (Auto Updated)	Next Family Follow Up: (Auto Updated)	Family Contact Interval: Every Month

Individual Deployment Support Specialist (IDSS) Contact Info — FFSC: Oceana — IDSS: HARN, MISTY D (MISTY.HARN.CTR@NAVY.MIL)

Last Contact: 03-15-2011 10:43 UTC-4 (Auto Updated)	Follow Up Due: 05-12-2011	Contact Interval: Every 2 Months
NR/NC: N/A		Contact Restriction: None

Deployment IA File Information

Noble Eagle No.: NE-4117-0007	Sailor Support UIC: 00060	Family Support UIC: 00060
IA Destination: Afghanistan	Orders Type: GSA	Family Pre-Deployment Brief Offered: 10-08-2010
Orders DTG: 230155Z FEB 11	Sailor Pre-Deployment Brief:	Family Pre-Deployment Brief Attended:
Departure Date: 05-07-2010	Family Received IA Family Handbook: 10-08-2010	
Planned Return Date: 05-07-2011	Returning NMPS: 3254A - NORV	Family Pre-Return Brief Offered:
Scheduled Rotator Date: 05-02-2011	Scheduled WTP Date: 04-29-2011	Family Pre-Return Brief Attended:

Post-Deployment Information (*Items in red are required to close the file)

1. *Actual Return Date: 04-19-2011	Cmd. Sponsored Integration Event Held: N/A	Attended Returning Warrior Workshop (RWW): N/A
2. *Post-Deployment Health Assessment (PDHA) Completed: 04-23-2011 (*Set by MRRS)	3. *Post-Deployment Health Reassessment (PDHRA) Completed: 10-04-2011 (*Set by MRRS)	4. *9-Month Since Return: 01-19-2012 Service Member Separated on:

IA File History (Help)

Date / Time	Who	What	Details
11-04-2011 08:25 UTC-4	HEATHER MARTIN	Assignment	MISTY HARN assigned as IDSS
11-04-2011 08:25 UTC-4	HEATHER MARTIN	Assignment	MELANIE CLEMENTE removed as IDSS

Trusted sites | 100%

Populated by NMCMPS
Triggers required to remove record
Populated by MRRS
Populated by CENTCOM/HOA BOG Trackers
CIAC/IDSS Info

Sailor / Family Contact Interval

Command IA File Information (Help)

To record a contact:
1. Update any dates or IA information (optional)
2. At the bottom of the page, select a **Reason For Update**
3. Enter comment in text box
4. Click the **Save** button

Note: The "Last Contact"/"Next Follow up" dates are automatically updated only if a "Contacted" (starred*) reason is selected!

☐ **Sailor Did Not Execute Orders**
Note: This will change IA File status. (File will be closed by NFAAS in approx. 2 weeks)

Command IA Coordinator (CIAC) Contact Info CIAC: [redacted]

Last Sailor Contact: 11-29-2010 10:37 UTC-5 (Auto Updated)	Next Sailor Follow Up: 12-29-2010	Sailor Contact Interval: Every Month
Last Family Contact: 11-29-2010 10:37 UTC-5 (Auto Updated)	Next Family Follow Up: 12-29-2010	Family Contact Interval: Every Month

Deployment IA File Information

Noble Eagle No.: NE-2940-0038	Sailor Support UIC: 61843	Family Support UIC: 61843
IA Destination: Afghanistan		Family Pre-Deployment Brief Offered:
Orders DTG: 280240Z DEC 09	Sailor Pre-Deployment Brief:	Family Pre-Deployment Brief Attended:
Departure Date: 06-11-2010	Sailor Received IA Handbook:	Family Received IA Family Handbook:
Planned Return Date: 06-06-2011	Returning NMPS:	Family Pre-Return Brief Offered:
Scheduled Rotator Date:	Scheduled WTP Date:	Family Pre-Return Brief Attended:

Post-Deployment Information (*Items in red are required to close the file)

1. *Actual Return Date:	Cmd. Sponsored Integration Event Held: N/A	Attended Returning Warrior Workshop (RWW): N/A
Can be set before **Actual Return Date** *above*	*Requires* **Actual Return Date** *and* **PDHA** *entries*	*Requires* **Actual Return Date**, **PDHA**, *and* **PDHRA** *entries*
2. *Post-Deployment Health Assessment (PDHA) Completed: ☐ Not Required (See DHCC instruction) ☐ Not Performed	3. *Post-Deployment Health Reassessment (PDHRA) Completed: ☐ Not Required (See DHCC instruction) ☐ Not Performed	4. *9-Month Since Return: ☐ OK to Close File ☐ Close Case-Service Member Separated on:

Reason for Update: Choose One — * Only these reasons are considered "contacts".
- Choose One
- Contacted Sponsor*
- Contacted Family*
- Contacted Both*
- Attempted Contact
- Other Update

**** To update you must indicate who was contacted (Sailor/Family) then click the Save button***

Save | Cancel

Report Capability & Trend Analysis

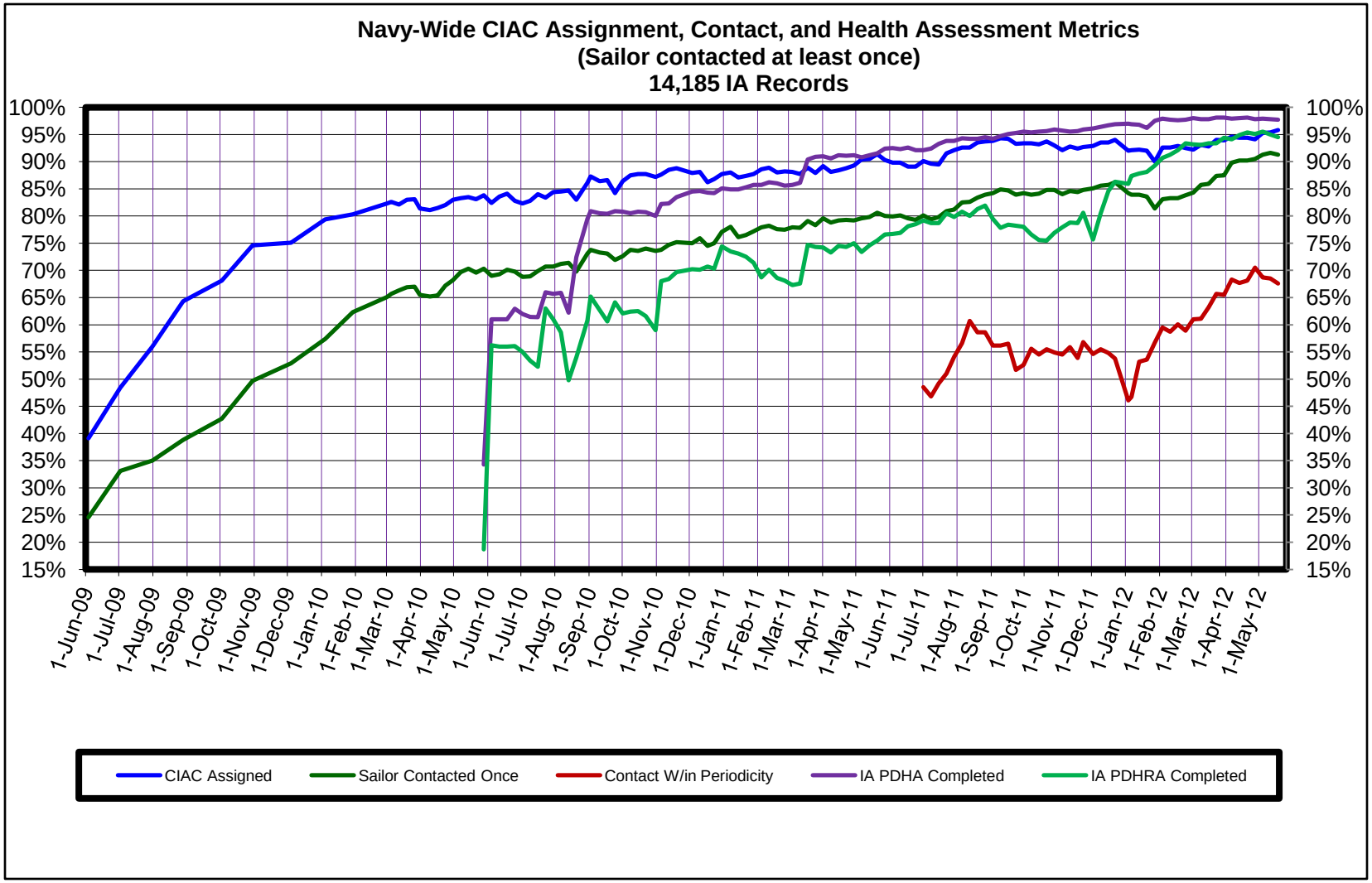

Break

Resources

CIAC Resources

- Navy IA Website: www.ia.navy.mil
- Navy IA App for Smartphone Devices
  - iPhone, Android, Blackberry
- "The CIAC Paddle" bimonthly newsletter (archived on Navy IA website and distributed via NFAAS)
- USFF CIAC Action Officers:
  - ISCM Mark Helling: CIAC Compliance
    - 757-836-6626 / DSN: 836-6626
    - mark.p.helling@navy.mil
  - Mr. Paul Baker: IA Data & Metrics / NFAAS SME
    - 757-836-8532 / DSN: 836-8532
    - paul.a.baker@navy.mil
- ECRC website: www.ecrc.navy.mil
- NMPS websites: Norfolk, San Diego, Gulfport
- NFAAS web site: https://navyfamily.navy.mil

IA Sailor & Family Resources

- ***Navy IA Website: www.ia.navy.mil***
- ***Navy IA App for Smartphones: iPhone, Android, Blackberry***
- ***NMPS websites: Norfolk, San Diego, Gulfport***
- ***Command Ombudsman***
- ***Fleet & Family Support Center: 800-FSC-LINE, FFSC Website***
- ***NFAAS: https://navyfamily.navy.mil***
- ***Chaplains: www.chaplaincare.navy.mil***
- ***Navy & Marine Corps Relief Society: www.nmcrs.org***
- ***Red Cross: www.redcross.org***
- ***Military One Source: 800-655-4545, http://www.militaryonesource.com***
- ***Operational Stress Control websites:***
  - ***Navy Operational Stress Control: www.navynavstress.com***
  - ***Naval Center Combat Operational Stress Control: NCCOSC Website***

Fleet & Family Support Center (FFSC)
IA Support

Chaplain Support for IA

Conclusion

Top IA Support Issues

- **Lack of quality care from parent command / CIAC during the IA Deployment**
  - Parent Command shows inadequate empathy for their IA Sailor
- **Incomplete Pre-Deployment screening**
  - Security Clearance, ISOPREP, medical issues, compliance with orders
- **Insufficient career management support from parent command**
  - PTS, advancement exams
- **No or poor parent command support in the Re-Deployment phase**
  - IA is not supported properly following transfer to a new command

CIAC Keys to Success

- ***Read*** *all IA Sailor Orders in their entirety!*
- ***Utilize*** *the* ***Navy IA website***
- ***Be proactive*** *to ensure your Sailors are prepared prior to deployment!*
- ***Contact*** *your IA Sailor regularly and document in* ***NFAAS****!*
- ***Ask*** *questions!*

Conclusion

- ***IA Success is a Command Responsibility!***
- ***Successful Command support of IA Sailors starts with a proactive and committed CIAC!***
- ***Complete the NFAAS tutorial***
- ***Visit the Navy IA website habitually for "What's New" and changes to IA policy***
- ***Email usff.ia.fct@navy.mil with any questions***