						REVISIONS
ZONE	LTR	DESCRIPTION	DATE	APPROVED
ALL	A	REVISED ENTIRE PLAN INCLUDING LIST OF MATERIAL.GENERAL NOTES.REFERENCES. TABLES AND DETAILS.	5/12/21	
I-A		PROVIDED NEW ORIGINAL TRACING FOR SHT 1		
26-C		ADDED STRAP ASSEMBLY AS ALTERNATE METHOD OF VERTICAL RESTRAINT.		
28-E		ADDED DETAIL FOR VERTICAL RESTRAINT OF HALON BOTTLES (TABLE A.CYL NO 20-23)		

TABLE A CYLINDER SIZES

CYL NO	TYPE	DIMENSIONS						REMARKS
1	ACETYLENE	4	± 1/2	12.5	± 1			
2	ACETYLENE	6	± 1/2	20	± 1.5			
3	ACETYLENE	7	± 1	22	± 1.5			
4	ACETYLENE	12	± 1	29	± 2			
5	ACETYLENE	7	± 1	26	± 2			
6	ACETYLENE	9.5	± 1	32.5	± 2			
7	ACETYLENE	12	± 1/2	41	± 1.5			
8	CARBON DIOXIDE	6 1/2	± 1/4	26	± 1			
9	CARBON DIOXIDE	6 3/4	± 1/4	29	± 1			
10	CARBON DIOXIDE	8 1/2	± 1/4	35	± 1			
11	CARBON DIOXIDE	8 1/2	± 1/4	51	± 1			
12	AIR,AR,HE,H_2,N_2,O_2	9	± 1/4	51	± 1			
13	AIR,NITROGEN	9 1/4	± 1/4	51	± 1			
14	OXYGEN	9 1/4	± 1/4	54	± 1			
15	REFRIGERANT,FUMIGANT	6 3/4	± 1/4	11	± 1			
16	REFRIGERANT,FUMIGANT	6 3/4	± 1/4	21	± 1			
17	REFRIGERANT,FUMIGANT	8 3/16	± 1/4	27	± 1			
18	REFRIGERANT,FUMIGANT	12 3/16	± 1/4	36	± 1			
19	HALON	8.5	± .187	17	± 1			
20	HALON	8.5	± .187	35	± 1			GN 3
21	HALON	8.5	± .187	51	± 1			GN 3
22	HALON	8.5	± .187	54	± 1			GN 3
23	HALON	9.25	± .187	56	± 1			GN 3

TABLE B-DIMENSIONS FOR MULTI-PURPOSE GAS CYLINDER RACK

ASSY NO	A	B	C	D			
B 1	27	7 1/2	12	16	29	42	29
B 2	32	9	14	20	37	-	37

NOTE: [illegible]

TABLE C-DIMENSIONS FOR SMALL GAS CYLINDER RACK

ASSY NO	A	B	C
C 1	11	3 1/2	-
C 2	19	11 1/2	3 1/2
C 3	21	11 1/2	3 1/2
C 4	10	2 1/2	-
C 5	20	11 1/2	3 1/2
C 6	16	8 1/2	2 1/2

NOTE: [illegible] FRONT ELEVATION [illegible] DEFINITION OF TABLE [illegible] DIMENSION A,B [illegible]

SEE DET	PC NO.	DESCRIPTION	MATERIAL	MATL SPEC	REMARKS	REF DWG
22-D	69	3 X 1/4 FLAT BAR	OS(GALV)	A-36 MIL-S-22698	L=D-1 1/2	
16-F	68	4 X 3/8 FLAT BAR	OS(GALV)	A-36 MIL-S-22698	FOR PC 5	
16-F	67	4 X 3/8 FLAT BAR	OS(GALV)	A-36 MIL-S-22698	FOR PC 37	
10-A	66	4 X 3/8 FLAT BAR	OS(GALV)	A-36 MIL-S-22698	FOR PC 38	
28-E	65	LINER ,1 THK	RUBBER	MIL-G-1149	7 3/16 DIA	
28-E	64	5.1# PL	OS(GALV)	A-36 MIL-S-22698	7 7/16 DIA	
28-E	63	5.1# PL ROLLED	OS(GALV)	A-36 MIL-S-22698	7 3/16 ID,3 LG	
26-E	62	5.1# PL	OS(GALV)	A-36 MIL-S-22698	4 1/2 DIA	
26-E	61	1/4 DIA ROD	OS(GALV)	A-36 MIL-S-22698		
26-E	60	1/4 DIA ROD	OS(GALV)	A-36 MIL-S-226.8		
26-B	59	3/4 DIA ROD	OS(GALV)	A-36 MIL-S-22698	4 LONG	
25-B	58	10.2# PL	OS(GALV)	A-36 MIL-S-226v8	4 X 5 (FLG)	
26-B	57	10.2# PL	OS(GALV)	A-36 MIL-S-22698	4 X 5 (FLG)	
26-C	56	4 DIA X-STRONG PIPE	OS(GALV)	ASTM A53		
26-C	55	RACHET BUCKLE	OS(GALV)	COML	GN 4	
26-C	54	SNAPHOOK	OS(GALV)	COML	GN 4	
26-C	53	STRAP	KEVLAR	MIL-T-87130	GN 4	
24-E	52	1/4 DIA ROD	OS(GALV)	A-36 MIL-S-22698		
24-E	51	LANYARD	CRES	RR-W-410	FOR PC 23 TY-VI,CL-1	

GENERAL NOTES

1. THE PURPOSE OF THIS PLAN IS TO PROVIDE A MULTI-PURPOSE STOWAGE RACK WHICH ACCOMMODATES CYLINDERS LISTED IN TABLE "A" AND SIMILAR CYLINDERS COMMONLY USED ABOARD SHIPS.

2. PRIMARY METHOD OF VERTICAL RESTRAINT IS SWING COLLAR ASSEMBLY (UPPER BAR) AS SHOWN BY DETAIL 19-A,SHEET 3 (FOR HALON BOTTLES SEE GN 3).FOR ALTERNATE METHOD OF VERTICAL RESTRAINT ELIMINATE UPPER BAR AND INSTALL STRAP ASSEMBLY AS SHOWN BY ELEVATION 26-C,SHEET 4.

3. FOR HALON BOTTLES (NO 20-23 TABLE A) WITH OVERSIZED PROTECTIVE CAPS,ELIMINATE UPPER BAR AND INSTALL STRAP ASSEMBLY IAW DETAIL 28-E. GLUE RUBBER LINER,PC 65,TO INSIDE OF NEW COLLAR WITH SILICONE ADHESIVE,PC 26. INSTALL NEW COLLAR DIRECTLY ONTO TOP OF PROTECTIVE CAP. IF NEW COLLAR COVERS VENT HOLES IN PROTECTIVE CAP,DRILL NEW VENT HOLES BELOW COLLAR SIMILAR TO EXISTING.

4. VERTICAL STRAP ASSEMBLY TO CONSIST OF KEVLAR STRAP (TYPE X,CLASS II) PC 53,RACHET BUCKLE WITH INTEGRAL HOOK (SIMILAR OR EQUAL TO AEROQUIP 31003) PC 55 AND SNAP HOOK (SIMILAR OR EQUAL TO AEROQUIP FE 7265-1) PC 54. STRAP ASSEMBLY SHALL BE CAPABLE OF WITHSTANDING A PULL TEST OF 10,000 LBS WITHOUT PERMANENT DEFORMATION. LENGTH OF STRAP TO HAVE SUFFICIENT SLACK TO ACCOMMODATE MAXIMUM STOWAGE.

5. HORIZONAL STRAP ASSEMBLY,PC 12, TO CONSIST OF KEVLAR STRAP (TYPE VI,CLASS 9) "D" RINGS (SIMILAR OR EQUAL TO AEROQUIP FE 7668-1) AND CAM BUCKLE (SIMILAR OR EQUAL TO AEROQUIP 31104). STRAP ASSEMBLY AND ATTACHMENTS SHALL BE CAPABLE OF WITHSTANDING A PULL TEST OF 500 LBS WITHOUT PERMANENT DEFORMATION. LENGTH OF STRAP TO ACCOMMODATE (2) 6 1/2 INCH TO 13 INCH DIA CYLINDERS FOR MULTI-PURPOSE STOWAGE RACK AND (3) 4 INCH TO 8 1/2 INCH DIA CYLINDERS FOR SMALL GAS CYLINDER STOWAGE.

   CAUTION: NYLON STRAP SHALL NOT BE SUBSTITUTED FOR KEVLAR STRAP.

6. METAL SURFACES OF STOWAGE RACK THAT COME IN CONTACT WITH CYLINDER ARE TO BE COATED WITH VINYL PLASTISOL,MIL-D-20689, 1/16 INCH THICK. ROUND SHARP EDGES TO PROVIDE SMOOTH SURFACE FOR COATING.

7. RACKS SHOWN ARE FOR SHIPS WITH STEEL DECKS AND BULKHEADS. FOR SHIPS WITH ALUMINUM DECKS AND BULKHEADS SUBSTITUTE ALUMINUM 5086-H116(PLATE) AND 5086-H111(SHAPES) FOR PC NOS. 1,5,22,37,38,43,49,50,66,67,68.HARDWARE TO BE CRES. FAYING SURFACES BETWEEN DISSIMILAR METALS SHALL BE ~~TREATED IN ACCORDANCE WITH NAVSEA TM S9086-VD-STM-000,CHAPTER 631.~~ INSULATED BY APPLYING TWO LAYERS OF INSULATION TAPE (7MILS TOTAL THICKNESS) CONFORMING TO MIL-I-24391. THE TAPE MUST EXTEND ACROSS THE ENTIRE WIDTH OF THE JOINT EDGE.

8. RACKS AND COMPONENTS SHOWN HERE-IN SHALL MEET GRADE "B" SHOCK REQUIREMENTS IN ACCORDANCE WITH MIL-S-901.

9. ALL WELDING TO BE IN ACCORDANCE WITH ~~CHAPTER 074,VOL #1 OF NAVSEA TM S9086-CH-STM-010.~~ MIL-STD-1689.

10. SHARP OR ROUGH EDGES OF EXPOSED WORK SHALL BE GROUND SMOOTH.

11. ALL RACKS TO BE LEVEL AND PARALLEL TO BASELINE.

12. ZONES IN PARENTHESIS SUCH AS (ZONE 3-A) LOCATED UNDER TITLE OF A DETAIL INDICATE ORIGIN OF THAT DETAIL.

~~13. DIMENSIONS,SIZES AND MATERIALS MAY NOT BE DEVIATED UNLESS SPECIFICALLY NOTED.~~

13. DEVIATIONS FROM THIS DRAWING ARE PERMITTED WHERE NOTED WITH AN ASTERISK (*).

14. DETAIL 24-A SHOWS SUGGESTED LOCATION OF HOLES FOR UPPER BAR FOR [illegible] AND [illegible]. HOWEVER, RECOMMEND [illegible] HOLES [illegible] BOTTLES RECEIVED TO ENSURE PROPER BEARING, DUE TO VARYING BOTTLE HEIGHT TOLERANCES (SEE TABLE A, HEIGHT DIMENSION). TO ACCOMMODATE [illegible] CYLINDER HEIGHTS, DRILL 9/16 DIAMETER HOLES IN SUPPORT, AS REQUIRED.

15. COLLAR HINGE.PC 28.TO BE "NOT SWAGED"FOR SURFACE INSTALLATION AND WITHOUT HOLES. HINGE TO BE 2" LONG AND 4" WIDE.

16. FINISHED ASSEMBLY TO BE PAINTED WITH EPOXY POLYAMIDE SYSTEM.MIL-P-24441.AS FOLLOWS:
   (1)COAT FML 150 AT 3 MIL DFT (GREEN)
   (1)COAT FML 154 AT 3 MIL DFT (DARK GRAY)
   (1)COAT FML 151 AT 3 MIL DFT (HAZE GRAY)

~~IN ACCORDANCE WITH PARA 6.8 AND 6.10 OF NAVSEA TM S9086-VD-STM-000/CH-631~~ SURFACES SHOULD BE COMPLETELY FREE FROM RUST.LOOSE PAINT.DIRT.SCALE.OIL.GREASE.SALT DEPOSITS. MOISTURE AND OTHER CONTAMINANTS AND BE ROUGHENED BY ~~MECHANICAL ABRATIVE PRIOR TO PAINTING.~~ [illegible] ABRASIVE [illegible] BY MECHANICAL [illegible] SUITABLE PAINT [illegible] PRACTICE.

SHOCK NOTE

1. GAS CYLINDER STOWAGE RACKS BUILT TO THIS STANDARD DRAWING SHALL MEET GRADE "B" SHOCK REQUIREMENTS OF MIL.SPEC. MIL-S-901. THE STOWAGE RACK DESIGNS PRESENTED ON THIS DRAWING WERE TESTED FOR GRADE "B" SHOCK IN ACCORDANCE WITH MIL-S-901 AND ACCEPTED BASED ON HI-TEST LABORATORIES.INC..REPORT NO'S 231.232 AND 233. ANY DEVIATIONS OR WAIVERS SHALL REQUIRE FIRST ARTICLE SHOCK TEST.

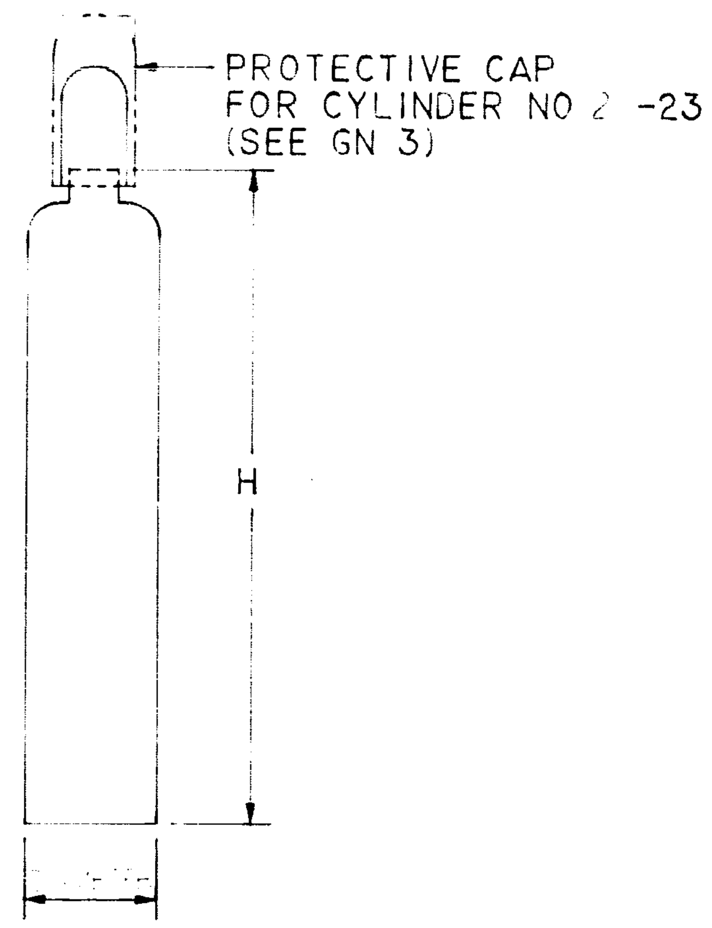

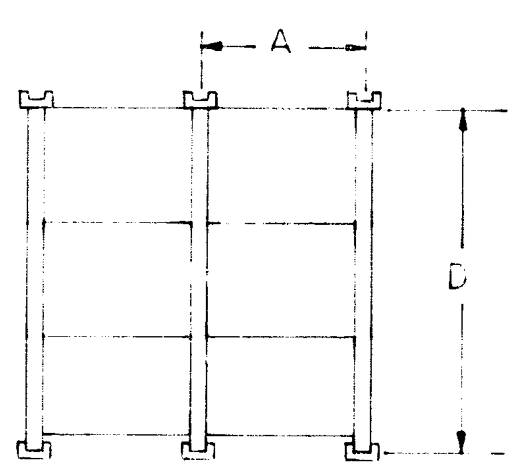

1 UNIT
MULTI-ROW (ROW) APPLICATION

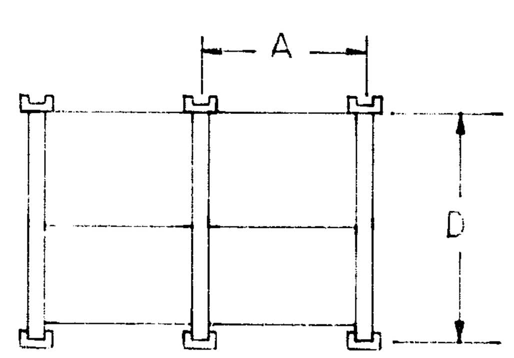

2/3 UNIT
MULTI-ROW (ROW) OR
FREE STANDING APPLICATION

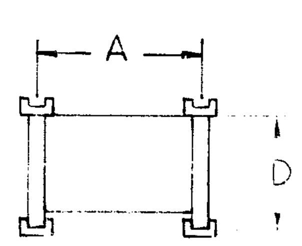

1/6 UNIT

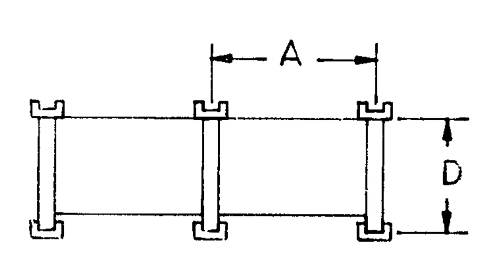

1/3 UNIT

ROW APPLICATION

PLAN VIEW 6-A

MULTI-PURPOSE GAS CYL RACK APPLICATION

CONT ZONE 8-A

SEE DET	PC NO.	DESCRIPTION	MATERIAL	MATL SPEC	REMARKS	REF DWG
28-A	50	10.2#PL	OS(GALV)	ASTM A-36 MIL-S-22698	3 X 5 1/2	
28-A	49	10.2#PL	OS(GALV)	ASTM A-36 MIL-S-22698	3 X 3	
19-A	48	2 X 2 X 1/4 ANGLE	OS(GALV)	ASTM A-36 MIL-S-22698		
19-A	47	PLASTISOL	VINYL	MIL-D-20689	GN 6	
19-A	46	4 DIA X-STRONG PIPE	OS(GALV)	ASTM A-53 WW-P-404	HALF,2 1/4 LG GN 6	
16-F	45	3/8-16UNC U-BOLT	OS(GALV)	COML	SIZE TO SUIT PC NO.16	
16-F	44	3/8-16UNC HEX HD NUT	OS(GALV)	A-307 MIL-S-1222		
21-A	43	10.2#PL	OS(GALV)	ASTM A36 MIL-S-22698	2 1/2 X 4	
19-D	42	10.2#PL	OS(GALV)	ASTM A36 MIL-S-22698	2 X 3 SHIM	
22-C	41	2 X 2 X 1/4 ANGLE	OS(GALV)	ASTM A36 MIL-S-22698	L=D-1/2	
22-C	40	2 X 2 X 1/4 ANGLE	OS(GALV)	ASTM A36 MIL-S-22698	L=D-1/2	
19-A	39	WASHER	OS(GALV)	ASTM A36 MIL-S-22698	W/POLYETHENE BACKING	
16-F	38	2 X 2 X 1/4 ANGLE	OS(GALV)	ASTM A36 MIL-S-22698	L=D-1 1/4	
16-F	37	2 X 2 X 1/4 ANGLE	OS(GALV)	ASTM A36 MIL-S-22698	L=A+3,2A+3	
19-A	36	10.2#PL	OS(GALV)	ASTM A36 MIL-S-22698	2 X 4 1/4	
24-F	35	10.2#PL	OS(GALV)	ASTM A36 MIL-S-22698	3 X 2	
19-A	34	10.2#PL	OS(GALV)	ASTM A36 MIL-S-22698	2 WIDE	
19-A	33	10.2#PL	OS(GALV)	A36 MIL-S-22698	2 WIDE	
	32	NUMBER NOT USED				
	31	NUMBER NOT USED				
	30	NUMBER NOT USED				
19-D	29	2 X 3 X 1/4 ANGLE	OS(GALV)	ASTM A-36 MIL-S-22698	28 3/4 OR 33 3/4	
19-A	28	COLLAR HINGE	OS(GALV)	ANSI AI56.1	1/2 DIA(GN15)	
19-D	27	3 X 3 X 1/4 FB	OS(GALV)	ASTM A-36 MIL-S-22698	GN 6	
28-E	26	ADHESIVE	SILICONE	MIL-A-46106	GN 3	
	25	NUMBER NOT USED				
19-A	24	10.2#PL	OS(GALV)	A-36 MIL-S-22698	SHIM 2 X 2	
24-E	23	1/2 DIA ROD	OS(GALV)	ASTM A-36 MIL-S-22698	KEYPIN	
-	22	1 3/4 X 1/4 FB	OS(GALV)	ASTM A-36 MIL-S-22698		
19-A	21	10.2#PL	OS(GALV)	ASTM A-36 MIL-S-22698	2 WIDE	
22-D	20	2 X 2 X 1/4 ANGLE	OS(GALV)	ASTM A-36 MIL-S-22698	L=D-1/2	
22-D	19	2 X 2 X 1/4 ANGLE	OS(GALV)	ASTM A-36 MIL-S-22698	L=D-1/2	
19-D	18	SHLDR BLT	OS(GALV)	ASTM A-325 MIL-S-1222	1/2 X 2 1/4 (L_s=1)	
15-D	17	10.2#PL	OS(GALV)	ASTM A-36 MIL-S-22698	HINGE CLIP	
-	16	GRATING,EXTRUDED TYPE	ALUMINUM	MIL-G-18015	TY II(1 3/4)	
-	15	NUMBER NOT USED				
-	14	NUMBER NOT USED				
15-D	13	1/2 DIA WASHER	OS(GALV)	A-325 FF-W-92		
-	12	1 STRAP ASSY	KEVLAR	MIL-T-87130	GN 5	
31-A	11	10.2#PL	OS(GALV)	ASTM A-36 MIL-S-22698	3/4 WIDE	
31-D	10	10.2#PL	OS(GALV)	ASTM A-36 MIL-S-22698	2 3/4 X 32	
-	9	1/2 DIA HEX HD NUT	OS(GALV)	ASTM A-325 MIL-S-1222		
-	8	1/2 DIA HEX HD BLT	OS(GALV)	ASTM A-325 MIL-S-1222	1 LONG	
19-D	7	3/8 DIA ROD	OS(GALV)	A-36 MIL-S-22698		
31-B	6	10.2#PL	OS(GALV)	A-36 MIL-S-22698	3 X 2 (GN 6)	
24-A	5	3 X 5# CHANNEL	OS(GALV)	A-36 MIL-S-22698	60 1/4 LONG	
31-D	4	10.2#PL	OS(GALV)	A-36 MIL-S-22698	10 X 32 GN 6	
31-A	3	10.2#PL	OS(GALV)	A-36 MIL-S-22698	13 X 32	
31-B	2	3 X 3 X 1/4 ANGLE	OS(GALV)	A-36 MIL-S-22698	32 LONG	
27-E	1	2 X 2 X 3/8 ANGLE	OS(GALV)	A-36 MIL-S-22698	60 1/2 LONG	

PARTS LIST

APPROVED FOR PUBLIC RELEASE
DISTRIBUTION IS UNLIMITED

SUPERSEDES DWG 805-1848499
805-1848500
805-1848501
805-1848502

NO	DRAWING TITLE	DRAWING NO.
~~8~~	~~EXTINGUISHER,FIRE (HALON 1301)~~	~~MIL-E-24572A~~
~~7~~	~~CAPS & FLANGES,COMP GAS CYL~~	~~MIL-C-17376/3~~
~~6~~	~~COMP GAS CYL:REFRIGERANTS,FIRE EXT~~	~~RR-C-910/1~~
~~5~~	~~COMP GAS CYL:INDUSTRIAL SERVICES~~	~~RR-C-901/1~~
~~4~~	~~COMP GAS CYL:CARBON DIOXIDE~~	~~RR-C-901/2~~
~~3~~	~~COMP GAS CYL:ACETYLINE~~	~~MIL-C-3701B~~
~~2~~	~~CAPS & FLANGES,COMP GAS CYL:CAPS~~	~~MIL-C-17376/1~~
~~1~~	~~CAPS & FLANGES,COMP GAS CYL:FLANGE~~	~~MIL-C-17376/2~~

~~REFERENCES~~

A	A	A	A
SHT 4	SHT 3	SHT 2	SHT 1

REVISION STATUS OF SHEETS

UNLESS OTHERWISE NOTED DIMENSIONS ARE IN INCHES

TOLERANCES ARE IN ACCORDANCE WITH COMMERCIAL PRACTICE UNLESS OTHERWISE INDICATED ON DRAWING

CONTRACT NO.

PREP ACTIVITY CAGE CODE

	SIGNATURE	DATE
PREPARED	[illegible]	5-6-88
CHECKED	J.B	6-3-88
HD ENGR	J.TK	6-3-88
NAVY APPROVAL		
PROJ ENGR	[signature]	9-25-88
BR HD	[signature]	
DIV DIR	[signature]	9-25-88
GR DEP DIR	[signature]	9-28-88
APP FOR COMNAVSEA	[signature]	9/28/88

STANDARD DRAWING

DEPARTMENT OF THE NAVY WASHINGTON D.C. 20382-5101

NAVAL SEA SYSTEM COMMAND

RACK [illegible]

SIZE	CAGE CODE	ESWBS	DRAWING NO.	REV
F	53711	803	5184287	A

SCALE: AS NOTED | WEIGHT(MASS) | SHEET 1 OF 4

5184287 803 SH1