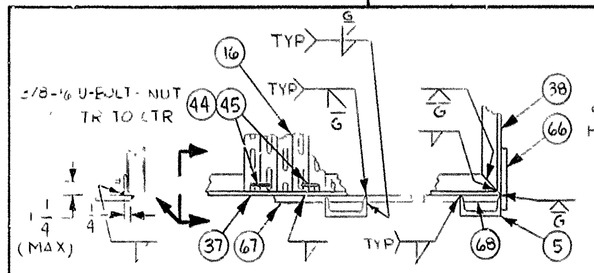

DETAIL 16-F

TYP RACK FOUNDATION
SCALE: NONE
(ZONE 12-A)

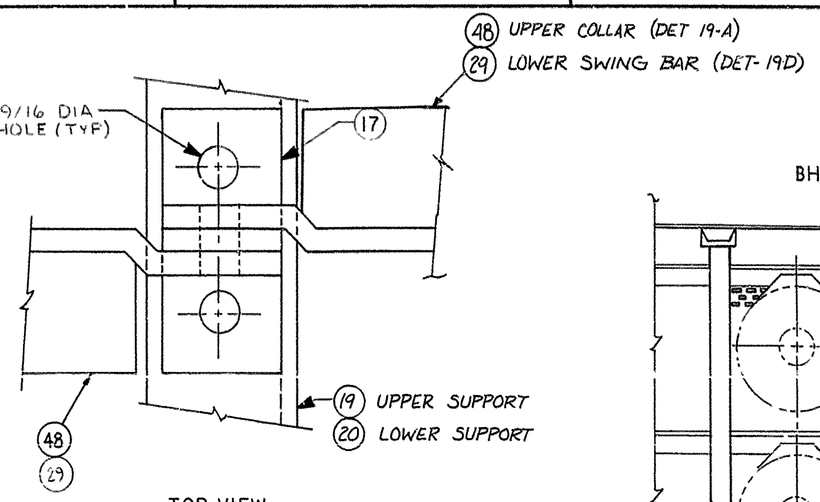

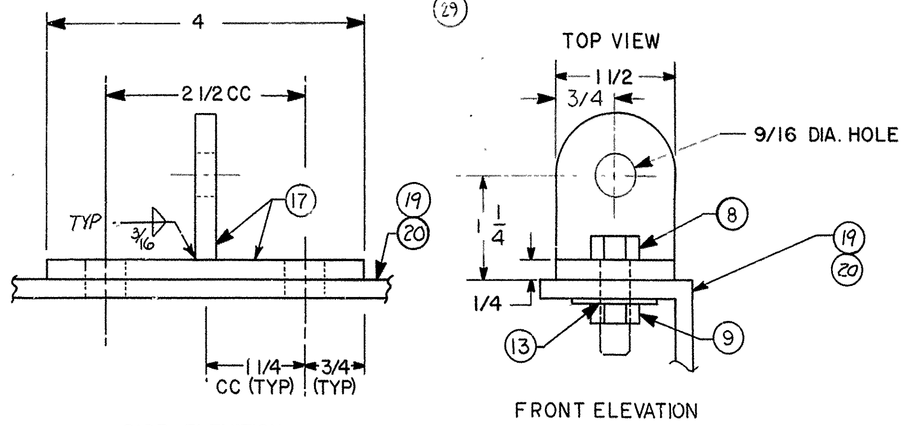

DETAIL 15-D

HINGE CLIP FOR LOWER SWING BAR & UPPER SWING COLLAR ASSY
SCALE: FULL
(ZONE 12-D)

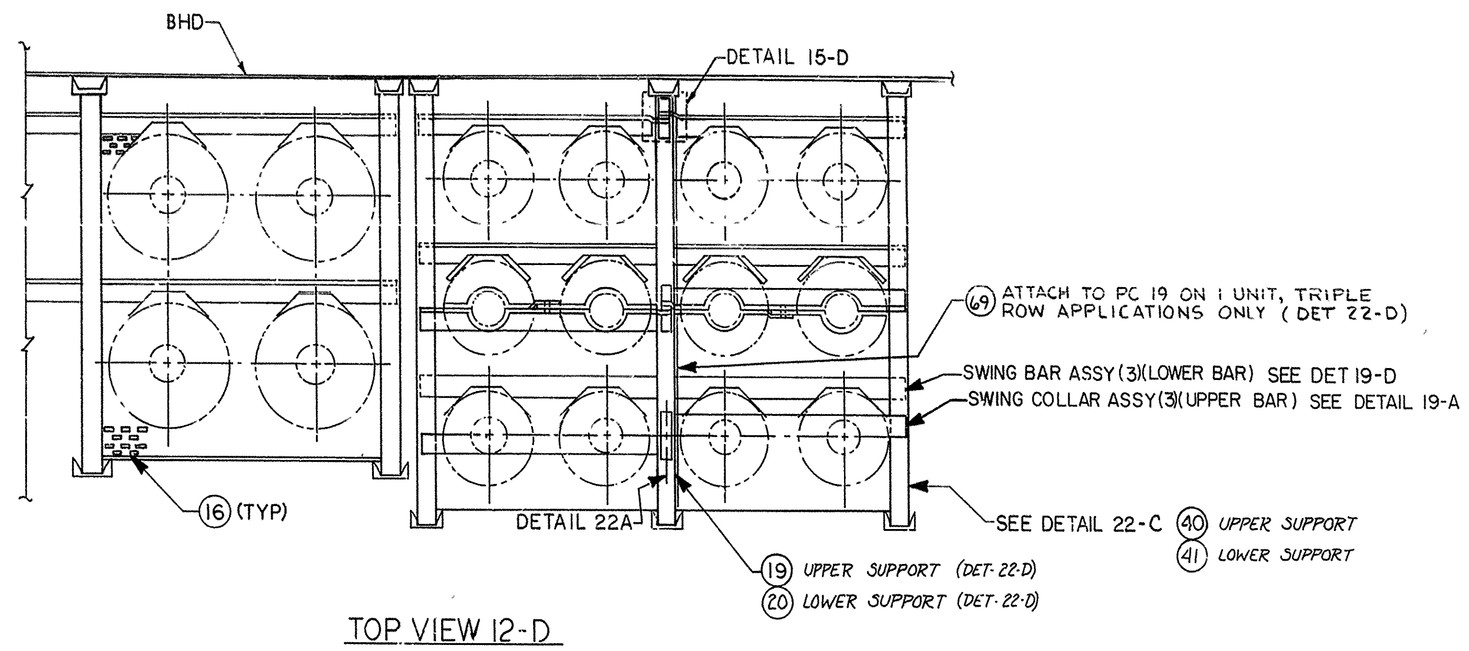

TOP VIEW 12-D

MULTI-PURPOSE GAS CYLINDER RACK

NOTE:
DIMENSIONS A,B,C & D ARE GIVEN IN TABLE B, SHT. 1

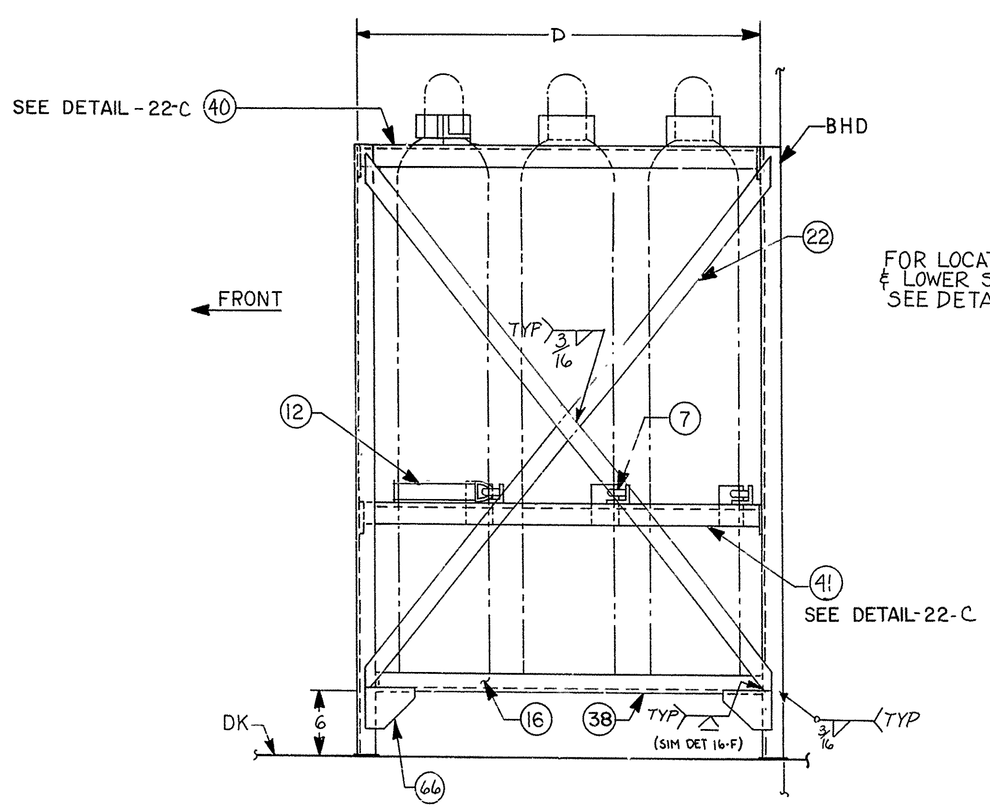

SIDE ELEVATION 15-A

SHOWING MULTI-ROW APPLICATION
3 CYLINDERS DEEP

FOR LOCATION OF UPPER & LOWER SWING BARS SEE DETAIL 24-A

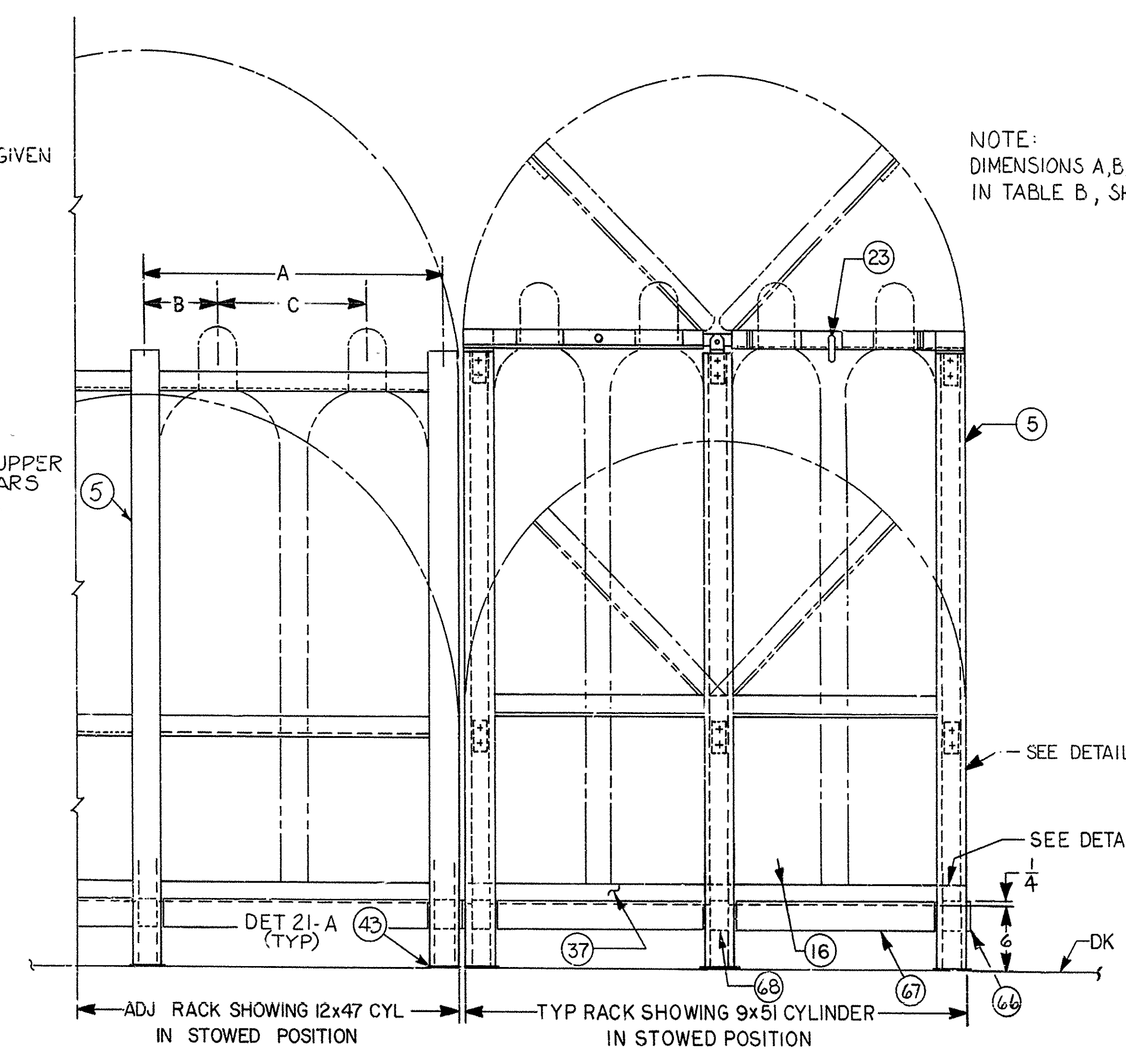

FRONT ELEVATION 12-A

(FOR MULTI-ROW, SGLE. ROW & FREE STANDING APPLICATIONS)
SCALE 1½=1-0
MULTI-PURPOSE GAS CYLINDER STOWAGE RACK
TO ACCOMMODATE CYL. HEIGHT (NECK HGT)
FROM 26 HIGH TO 56 HIGH
(TABLE A, CYL. NOS. 4-14, 17, 18 & 20-23)

NOTE:
DIMENSIONS A,B,C & D ARE GIVEN IN TABLE B, SHT. 1

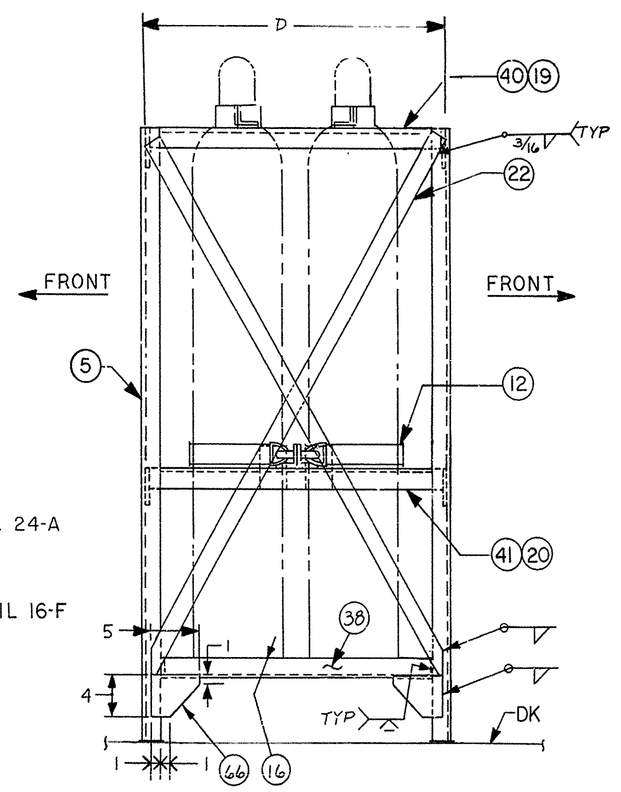

SIDE ELEVATION 10-A

SHOWING FREE STANDING
APPLICATION W/BACK TO BACK
SWING BAR ASSY AND DUAL
ACCESS

STANDARD DRAWING

SIZE	CAGE CODE	SWBS	NAVSEA DRAWING NO.	REV.
F	53711	803	5184287	A
SCALE	AS NOTED			SH. 2

DRAWING NO. 5184287 SHEET 2

5184287 803 SH2