UFC 4-159-03
3 October 2005

UNIFIED FACILITIES CRITERIA (UFC)

DESIGN: MOORINGS

APPROVED FOR PUBLIC RELEASE; DISTRIBUTION UNLIMITED

UNIFIED FACILITIES CRITERIA (UFC)

DESIGN: MOORINGS

Any copyrighted material included in this UFC is identified at its point of use.
Use of the copyrighted material apart from this UFC must have the permission of the copyright holder.

U.S. ARMY CORPS OF ENGINEERS

NAVAL FACILITIES ENGINEERING COMMAND (Preparing Activity)

AIR FORCE CIVIL ENGINEER SUPPORT AGENCY

Record of Changes (changes are indicated by **1**\ ... /**1**/)

Change No.	Date	Location

This UFC supersedes Military Handbook 1026/4, dated July 1999.

FOREWORD

The Unified Facilities Criteria (UFC) system is prescribed by MIL-STD 3007 and provides planning, design, construction, sustainment, restoration, and modernization criteria, and applies to the Military Departments, the Defense Agencies, and the DoD Field Activities in accordance with USD(AT&L) Memorandum dated 29 May 2002. UFC will be used for all DoD projects and work for other customers where appropriate. All construction outside of the United States is also governed by Status of forces Agreements (SOFA), Host Nation Funded Construction Agreements (HNFA), and in some instances, Bilateral Infrastructure Agreements (BIA.) Therefore, the acquisition team must ensure compliance with the more stringent of the UFC, the SOFA, the HNFA, and the BIA, as applicable.

UFC are living documents and will be periodically reviewed, updated, and made available to users as part of the Services' responsibility for providing technical criteria for military construction. Headquarters, U.S. Army Corps of Engineers (HQUSACE), Naval Facilities Engineering Command (NAVFAC), and Air Force Civil Engineer Support Agency (AFCESA) are responsible for administration of the UFC system. Defense agencies should contact the preparing service for document interpretation and improvements. Technical content of UFC is the responsibility of the cognizant DoD working group. Recommended changes with supporting rationale should be sent to the respective service proponent office by the following electronic form: Criteria Change Request (CCR). The form is also accessible from the Internet sites listed below.

UFC are effective upon issuance and are distributed only in electronic media from the following source:

- Whole Building Design Guide web site http://dod.wbdg.org/.

Hard copies of UFC printed from electronic media should be checked against the current electronic version prior to use to ensure that they are current.

AUTHORIZED BY:

DONALD L. BASHAM, P.E.
Chief, Engineering and Construction
U.S. Army Corps of Engineers

DR. JAMES W WRIGHT, P.E.
Chief Engineer
Naval Facilities Engineering Command

KATHLEEN I. FERGUSON, P.E.
The Deputy Civil Engineer
DCS/Installations & Logistics
Department of the Air Force

Dr. GET W. MOY, P.E.
Director, Installations Requirements and Management
Office of the Deputy Under Secretary of Defense (Installations and Environment)

UNIFIED FACILITIES CRITERIA (UFC)

NEW DOCUMENT SUMMARY SHEET

Description of Change: The UFC 4-159-03, *DESIGN: MOORING* represents another step in the joint Services effort to bring uniformity to the planning, design and construction of piers and wharves. This UFC contains extensive modifications in the following areas:

- Heavy Weather Mooring
- Passing Ship Effects
- Ship Generated Waves
- Conversion from Mil-Hdbk to UFC and general updates and revisions

Reasons for Change: The existing guidance was inadequate for the following reasons:

- Need to convert to UFC format
- Incorporation of changes described above
- Update to referenced documents

Impact: The following direct benefits will result from the update of 4-159-03, *DESIGN: MOORING*:

- Although primarily a U.S. Navy document, a single, comprehensive, up to date criteria document exists to cover mooring design.
- Eliminates misinterpretation and ambiguities that could lead to design and construction conflicts.
- Facilitates updates and revisions and promotes agreement and uniformity of design and construction between the Services.

TABLE OF CONTENTS

			Page
CHAPTER 1	INTRODUCTION		
Paragraph	1-1	Purpose and Scope	1
	1-2	Purpose of Criteria	1
	1-3	Definition	1
	1-4	Cancellation	1
	1-5	Organizational Roles and Responsibilities	1
CHAPTER 2	MOORING SYSTEMS		
Paragraph	2-1	Introduction	3
	2-1.1	Purpose of Mooring	3
	2-2	Types of Mooring Systems	3
	2-2.1	Fixed Mooring Systems	3
	2-2.2	Fleet Mooring Systems	3
CHAPTER 3	BASIC DESIGN PROCEDURE		
Paragraph	3-1	Design Approach	17
	3-2	General Design Criteria	19
	3-2.1	Mooring Service Types	20
	3-2.2	Facility Design Criteria for Mooring Service Types	21
	3-2.3	Ship Hardware Design Criteria for Mooring Service Types	21
	3-2.4	Strength	22
	3-2.5	Serviceability	22
	3-2.6	Design Methods	25
	3-2.7	General Mooring Integrity	25
	3-2.8	Quasi-Static Safety Factors	25
	3-2.9	Allowable Ship Motions	25
	3-3	Design Methods	30
	3-3.1	Quasi-Static Design	30
	3-3.2	Dynamic Mooring Analysis	32
	3-4	Risk	32
	3-5	Coordinate Systems	36
	3-5.1	Ship Design/Construction Coordinates	36
	3-5.2	Ship Hydrostatics/Hydrodynamics Coordinates	36
	3-5.3	Local Mooring Coordinate System	36
	3-5.4	Global Coordinate System	36
	3-5.5	Ship Conditions	36
	3-6	Vessel Design Considerations	40
	3-7	Facility Design Considerations	40
	3-8	Environmental Forcing Design Considerations	42
	3-8.1	Winds	42
	3-8.2	Wind Gust Fronts	45
	3-8.3	Storms	50
	3-8.4	Currents	53

TABLE OF CONTENTS *(continued)*

Page

3-8.5 Water Levels 53
3-8.6 Waves 53
3-8.7 Water Depths 54
3-8.8 Environmental Design Information 54
3-9 Operational Considerations 57
3-10 Inspection 58
3-11 Maintenance 59
3-12 General Mooring Guidelines 59

CHAPTER 4 STATIC ENVIRONMENTAL FORCES AND MOMENTS ON VESSELS
Paragraph 4-1 Scope 63
4-2 Engineering Properties of Water and Air 63
4-3 Principal Coordinate Directions 64
4-4 Static Wind Forces/Moments 65
4-4.1 Static Transverse Wind Force 65
4-4.2 Static Longitudinal Wind Force 75
4-4.3 Static Wind Yaw Moment 79
4-5 Static Current Forces/Moments 82
4-5.1 Static Transverse Current Force 82
4-5.2 Static Longitudinal Current Force for Ships 89
4-5.3 Static Longitudinal Current Force for Blunt Vessels 94
4-5.4 Static Current Yaw Moment 95
4-6 Wind and Current Forces and Moments on Multiple Ships 96

CHAPTER 5 ANCHOR SYSTEM DESIGN PROCEDURES
Paragraph 5-1 General Anchor Design Procedure 97
5-2 Drag-Embedment Anchor Specification 105
5-3 Driven-Plate Anchor Design 110

CHAPTER 6 FACILITY MOORING EQUIPMENT GUIDELINES
Paragraph 6-1 Introduction 115
6-2 Key Mooring Components 115
6-2.1 Tension Members 115
6-2.2 Compression Members 115
6-3 Anchors 115
6-4 Chain and Fittings 120
6-5 Buoys 124
6-6 Sinkers 124
6-7 Mooring Lines 124
6-7.1 Synthetic Fiber Ropes 124
6-7.2 Wire Ropes 131
6-8 Fenders 131

TABLE OF CONTENTS *(continued)*

Page

6-9 Pier Fittings 134
6-10 Catenary Behavior 136
6-11 Sources of Information 139

CHAPTER 7 VESSEL MOORING EQUIPMENT GUIDELINES
Paragraph 7-1 Introduction 141
7-2 Types of Mooring Equipment 141
7-3 Equipment Specification 141
7-4 Fixed Bitts 142
7-5 Recessed Shell Bitts 142
7-6 Exterior Shell Bitts 142
7-7 Chocks 142
7-8 Allowable Hull Pressures 142
7-9 Sources of Information for Ships' Mooring Equipment 142

CHAPTER 8 EXAMPLE PROBLEMS
Paragraph 8-1 Introduction 149
8-2 Single Point Mooring - Basic Approach 149
8-2.1 Background for Example 151
8-2.2 Ship 151
8-2.3 Forces/Moments 152
8-2.4 Quasi-Static Design 152
8-2.5 Mooring Hawser Break 152
8.3 Fixed Mooring - Basic Approach 155
8-3.1 Background 155
8-3.2 Goal 155
8-3.3 Ship 155
8-3.4 Forces/Moments 156
8-3.5 Definitions 156
8-3.6 Preliminary Analysis 156
8-3.7 Wharf Mooring Concept 161
8.4 Spread Mooring - Basic Approach 166
8-4.1 Background for Example 166
8-4.2 Goal 166
8-4.3 Ship 166
8-4.4 Forces/Moments 168
8-4.5 Anchor Locations 169
8-4.6 Definitions 170
8-4.7 Number of Mooring Legs 171
8-4.8 Static Analysis 173
8-4.9 Dynamic Analysis 174
8-4.10 Anchor Design 177
8-5 Mooring LPD-17, LHD-1 and LHA-1 181

TABLE OF CONTENTS *(continued)*

Page

8-5.1 Mooring LPD-17 181

CHAPTER 9 PASSING SHIP EFFECTS ON MOORED SHIPS
Paragraph 9-1 Introduction 190
9-2 Passing Ship Effects on Moored Ships 190

CHAPTER 10 SHIP WAVES
Paragraph 10-1 Introduction 193
10-2 Ship Waves 193

CHAPTER 11 HEAVY WEATHER MOORING GUIDELINES
Paragraph 11-1 Introduction 197
11-2 Discussion 197
11-3 Heavy Weather Mooring Guidelines 198
11-4 Action 203
11-4.1 Planning 203
11-4.2 Analysis and Design 203
11-4.3 Maintenance 203
11-4.4 Operations 203
11-5 Environmental Design Criteria for Selected Sites 203

APPENDIX A REFERENCES/BIBLIOGRAPHY A-1

FIGURES

Figure	Title	Page
1-1	DOD Organizations Involved With Ship Moorings	2
2-1	Single Ship, Offset From a Pier With Camels	5
2-2	Ship at a T-Pier (plan view)	5
2-3	Floating Drydock Spud Moored	6
2-4	Ships on Both Sides of a Pier (plan view)	6
2-5	Two Ships on One Side of a Pier (plan view)	7
2-6	Ship at Anchor	11
2-7	Single Point Mooring With Drag Anchors	12
2-8	Single Point Mooring With a Plate Anchor and a Sinker	13
2-9	Bow-Stern Mooring Shown in Plan View	14
2-10	Med-Mooring	14
2-11	Spread Mooring	15
2-12	Two Inactive Ships Moored at a Wharf	16
2-13	Spread Mooring	16

FIGURES *(continued)*

Figure	Title	Page
3-1	Risk Diagram	35
3-2	Ship Design and Hydrostatic Coordinates	37
3-3	Local Mooring Coordinate System for a Ship	38
3-4	Local Mooring Coordinate System for a Ship	39
3-5	Ratio of Wind Speeds for Various Gusts	43
3-6	Typhoon OMAR Wind Chart Recording	44
3-7	Sample Wind Gust Fronts on Guam	46
3-8	Distribution of Guam Wind Gust Front Wind Angle Changes	47
3-9	Initial Versus Maximum Wind Speeds for Wind Gust Fronts	48
3-10	Wind Gust Front Maxima on Guam 1982-1986	49
3-11	Idealized Models of Chain Wear	60
4-1	Definition of Terms	66
4-2	Local Coordinate System for a Ship	67
4-3	Sample Ship Profiles	70
4-4	Shape Function for Transverse Wind Force	71
4-5	Example	73
4-6	Blockage Effect for an Impermeable Structure Next to a Moored Ship	74
4-7	Sample Yaw Normalized Moment Coefficient	81
4-8	Examples of Ratios of Ship Draft (T) to Water Depth (d)	83
4-9	Broadside Current Drag Coefficient	84
4-10	Example of Transverse Current Drag Coefficients	88
5-1	Example of a Drag-Embedment Anchor (Stabilized Stockless Anchor)	99
5-2	Example of a Drag-Embedment Anchor (NAVMOOR Anchor)	100
5-3	Driven-Plate Anchor	101
5-4	Anchor System Holding Capacity in Cohesive Soil (Mud)	108
5-5	Anchor System Holding Capacity in Cohesionless Soil (Sand)	109
5-6	Major Steps of Driven-Plate Anchor Installation	113
6-1	Chain Fittings	123
6-2	Synthetic Line Stretch	127
6-3	SEA-GUARD Fender Information	132
6-4	SEA-CUSHON Fender Performance	133
6-5	Pier and Wharf Mooring Fittings Shown in Profile and Plan Views	135
6-6	Sample Catenary	137
6-7	Load/Deflection Curve for the Example Mooring Leg	138
7-1	Fixed and Recessed Shell Bitts	144
7-2	Recessed Shell Bitt (minimum strength requirements)	146
8-1	Some Types of Behavior of Ships at Single Point Moorings	150

FIGURES *(continued)*

Figure	Title	Page
8-2	Example Single Point Mooring	153
8-3	Example Mooring Failure Due to a Wind Gust Front	154
8-4	Wind Forces and Moments on a Single Loaded CVN-68 for a 75-mph (33.5-m/s) Wind	157
8-5	Definitions	158
8-6	Optimum Ideal Mooring	159
8-7	Required Mooring Capacity Using the Optimum Ideal Mooring	160
8-8	Efficiency of Ship Moorings Using Synthetic Lines at Piers and Wharves	162
8-9	CVN-68 Wharf Mooring Concept ('Model 2')	163
8-10	Component Analysis of Mooring Working Capacity	164
8-11	Mooring Line Tensions for a CVN-68 Moored at a Wharf with 75 mph (33.5 m/s) Winds ('Model 2')	165
8-12	Aircraft Carrier Mooring Concept	167
8-13	Wind Forces and Moments on a Nest of Four DD 963 Class Vessels for a Wind Speed of 78 mph (35 m/s)	170
8-14	Spread Mooring Arrangement for a Nest of Four Destroyers	172
8-15	End View of DD 963 Mooring Nest	175
8-16	Plate Anchor Holding Capacity	180
8-17	LPD-17 USS SAN ANTONIO	182
8-18	Approximate Safe Mooring Limits for LPD-17 with 28 Parts of Mooring Line	184
8-19	Sample LPD-17 Standard Mooring	186
8-20	Sample LPD-17 Storm Mooring	187
8-21	Sample LPD-17 Heavy Weather Mooring	188
8-22	Sample LPD-17 Mooring at a Double-Deck Pier	189
9-1	Sample Passing Ship Situation	192
9-2	Example of Passing Ship Predictions	193
10-1	Ship Waves	196
10-2	Ship Hull-Forms Tested	197
10-3	Maximum Wave Height One Wavelength Away From the Sailing Line for a SERIES 60 Hull	198
11-1	Example of a Standard LPD 17 Mooring and Heavy Weather Mooring	202
11-2	Securing Two Parts of Heavy Weather Mooring Line	204

TABLES

Table	Title	Page
2-1	Examples of Fixed Moorings	4
2-2	Examples of Fleet Moorings	8
3-1	Parameters in a Mooring Project	17
3-2	Basic Mooring Design Approach With Known Facility for a Specific Site and a Specific Ship	18
3-3	Design Issues	20
3-4	Mooring Service Types	21
3-5	Facility Design Criteria for Mooring Service Types	23
3-6	Ship Mooring Hardware Design Criteria	24
3-7	Minimum Quasi-Static Factors of Safety	26
3-8	Recommended Practical Motion Criteria for Moored Vessels	27
3-9	Quasi-Static Design Notes	31
3-10	Conditions Requiring Special Analysis	34
3-11	Design Considerations – Ship	40
3-12	Design Considerations – Facility	41
3-13	Sample Distribution of Wind Gust Fronts on Guam (Agana NAS) from 1982 to 1986	47
3-14	Storm Parameters	50
3-15	Some Sources of Environmental Design Information	55
3-16	Mooring Operational Design Considerations	58
3-17	Inspection Guidelines	59
3-18	Design Recommendations	61
4-1	Engineering Properties of Air and Water	63
4-2	Sample Wind Coefficients for Ships	69
4-3	Recommended Ship Longitudinal Wind Force Drag Coefficients	76
4-4	Recommended Values of θx	76
4-5	Normalized Wind Yaw Moment Variables	80
4-6	Predicted Transverse Current Forces on FFG-7 for a Current Speed of 1.5 m/s (2.9 knots)	87
4-7	Area Ratio for Major Vessel Groups	92
4-8	Example Destroyer	93
4-9	Example Longitudinal Current Forces on a Destroyer	93
4-10	Current Moment Eccentricity Ratio Variables	96
5-1	Anchor Specification Considerations	98
5-2	Anchor Characteristics	102
5-3	Drag Anchor Holding Parameters U.S. Customary	106
5-4	Drag Anchor Holding Parameters SI Units	107
5-5	Driven-Plate Anchor Components	111
5-6	Major Steps in Driven-Plate Anchor Installation	112

TABLES *(continued)*

Table	Title	Page
5-7	Typical Driven-Plate Anchors	114
6-1	Practical Experience With Anchors	116
6-2	Stockless Anchors in the U.S. Navy Fleet Mooring Inventory	118
6-3	NAVMOOR Anchors in the U.S. Navy Fleet Mooring Inventory	119
6-4	FM3 Mooring Chain Characteristics	121
6-5	Properties of FM3 Chain Anodes	122
6-6	Foam-Filled Polyurethane Coated Buoys	125
6-7	Stretch of Synthetic Lines	126
6-8	Double Braided Nylon Line	128
6-9	Double Braided Polyester Lines	129
6-10	Some Factors to Consider When Specifying Synthetic Line or Wire Rope	130
6-11	Commonly Used U.S. Navy Pier Mooring Fittings	134
6-12	Sources of Information for Facility Mooring Equipment	139
7-1	Types of Ship Based Mooring Equipment	143
7-2	Fixed Ship's Bitts (minimum strength requirements)	145
7-3	Closed Chocks (minimum strength requirements)	147
7-4	Sources of Information for Ships' Mooring Equipment	148
8-1	2nd LT JOHN P BOBO Parameters (Fully Loaded)	151
8-2	CVN-68 Criteria (Fully Loaded)	155
8-3	DD 963 Criteria (1/3 Stores)	168
8-4	Environmental Forces	169
8-5	Quasi-Static Leg Tensions for the Spread Mooring at Various Wind Directions With a Flood Tidal Current	173
8-6	Peak Dynamic Chain Tensions for DD 963 Nest for Various Wind Directions and a Flood Tidal Current	176
8-7	DD 963 Nest Motions for Surge, Sway, and Yaw at Various Wind Directions With a Flood Tidal Current	179
8-8	LPD-17 Characteristics	183

GLOSSARY 204

APPENDIX A REFERENCES A-1

CHAPTER 1

INTRODUCTION

1-1 **PURPOSE AND SCOPE.** This UFC provides design policy and procedures for design of moorings for U.S. Department of Defense (DOD) vessels.

1-2 **PURPOSE OF CRITERIA.** The purpose of this UFC is to ensure quality, consistency, and safety of DOD vessels, mooring hardware, and mooring facilities throughout the world. Other criteria should not be used without specific authorization.

1-3 **DEFINITION.** A mooring, in general terms, is defined as a compliant structure that restrains a vessel against the action of wind, wave, and current forces. For the purposes of this UFC, the emphasis is on moorings composed of tension members (chain, line, wire rope, etc.) and compression members (fenders, camels, etc.) used to secure vessels (surface ships, submarines, floating drydocks, yard craft, etc.). The term mooring in this UFC includes anchoring of ships.

1-4 **CANCELLATION.** This UFC cancels and supersedes MIL-HDBK-1026/4 *Mooring Design*, Naval Facilities Engineering Command, July 1999.

1-5 **ORGANIZATIONAL ROLES AND RESPONSIBILITIES.** Over the design life of a mooring facility, many organizations are involved with the various aspects of a facility. Personnel involved range from policy makers, who set the initial mission requirements for vessels and facilities, to deck personnel securing lines. Figure 1 illustrates the DOD organizations that must understand the various aspects of moorings. In addition, all these groups must maintain open communications to ensure safe and effective moorings.

Safe use of moorings is of particular importance for the end users (the ship's personnel and facility operators). They must understand the safe limits of a mooring to properly respond to significant events, such as a sudden storm, and to be able to meet mission requirements.

It is equally important for all organizations and personnel shown in Figure 1-1 to understand moorings. For example, if the customer setting the overall mission requirement states "We need a ship class and associated facilities to meet mission X, and specification Y will be used to obtain these assets" and there is a mismatch between X and Y, the ship and facility operators can be faced with a lifetime of problems, mishaps, and/or serious accidents.

Figure 1-1. DOD Organizations Involved With Ship Moorings

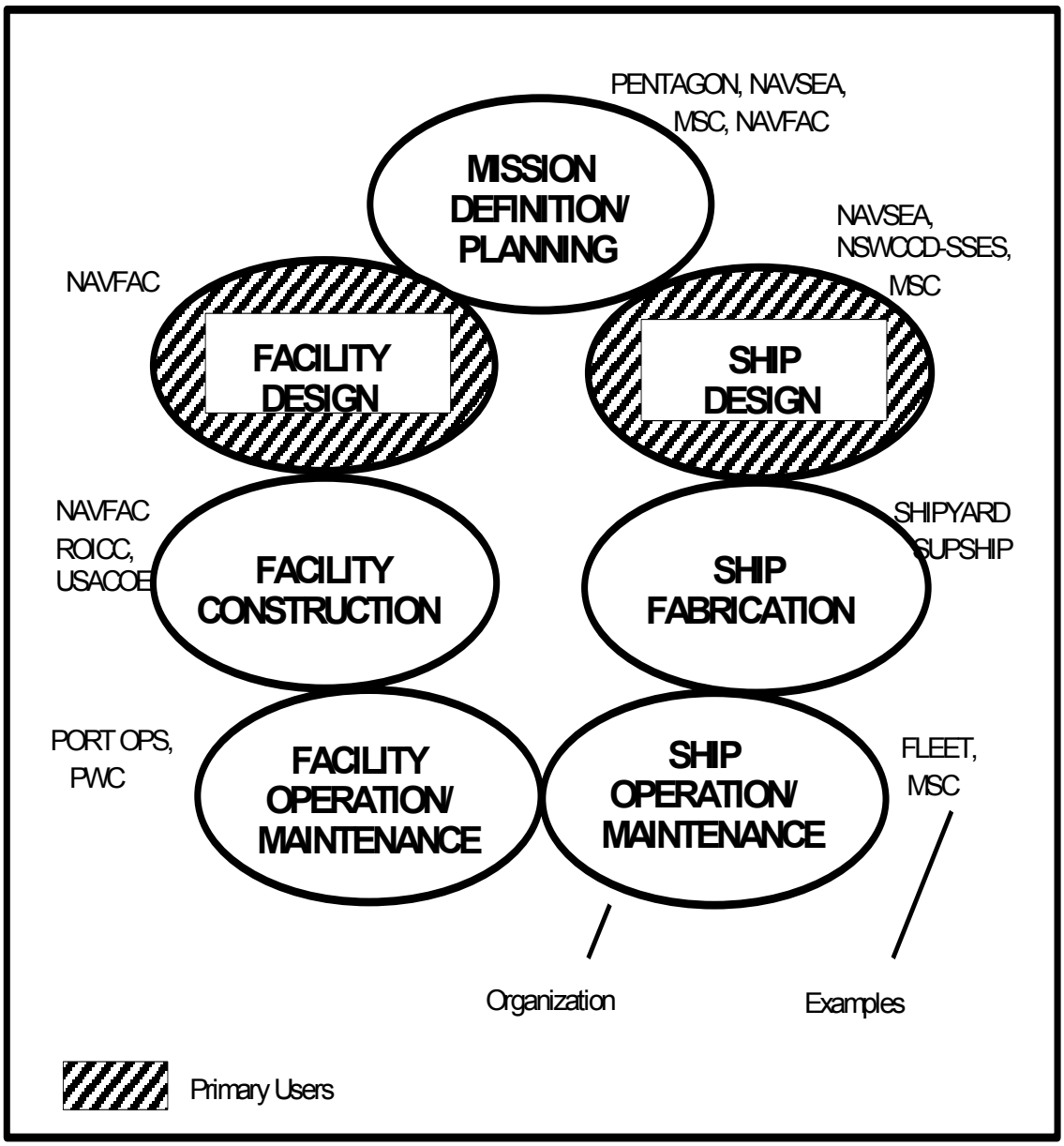

CHAPTER 2

MOORING SYSTEMS

2-1 **INTRODUCTION.** The DOD uses several types of mooring systems to moor ships. These systems can be summarized into two broad categories of moorings:

a) Fixed Moorings - Fixed moorings are defined as systems that include tension and compression members. Typical fixed mooring systems include moorings at piers and wharves.

b) Fleet Moorings - Fleet moorings are defined as systems that include primarily tension members. Mooring loads are transferred into the earth via anchors. Examples of fleet moorings include fleet mooring buoys and ship's anchor systems.

The more common types of moorings are discussed in this chapter.

2-1.1 **PURPOSE OF MOORING.** The purpose of a mooring is to safely hold a ship in a certain position to accomplish a specific mission. A key need is to safely hold the vessel to protect the ship, life, the public interest, and to preserve the capabilities of the vessel and surrounding facilities. Ship moorings are provided for:

a) Loading/Unloading - Loading and unloading items such as stores, cargo, fuel, personnel, ammunition, etc.

b) Ship Storage - Storing the ship in a mooring reduces fuel consumption and personnel costs. Ships in an inactive or reserve status are stored at moorings.

c) Maintenance/Repairs - Making a variety of repairs or conducting maintenance on the ship is often performed with a ship moored.

d) Mission - Moorings are used to support special mission requirements, such as surveillance, tracking, training, etc.

Most DOD moorings are provided in harbors to reduce exposure to waves, reduce ship motions, and reduce dynamic mooring loads. Mooring in harbors also allows improved access to various services and other forms of transportation.

2-2 **TYPES OF MOORING SYSTEMS.** Examples of typical moorings systems are given in this chapter.

2-2.1 **Fixed Mooring Systems.** Examples of typical fixed moorings are given in Table 2-1 and illustrated in Figures 2-1 through 2-5.

2-2.2 **Fleet Mooring Systems.** Examples of typical fleet moorings are given in Table 2-2 and illustrated in Figures 2-6 through 2-13.

Table 2-1. Examples of Fixed Moorings

a. Single Vessel Secured at Multiple Points

MOORING TYPE	FIGURE NUMBER	DESCRIPTION
Pier/Wharf	2-1 2-2	Multiple tension lines are used to secure a vessel next to a pier/wharf. Compliant fenders, fender piles and/or camels keep the vessel offset from the structure. A T-pier may be used to keep the ship parallel to the current, where the current speed is high.
Spud Mooring	2-3	Multiple vertical structural steel beams are used to secure the vessel, such as a floating drydock. This type of mooring is especially effective for construction barges temporarily working in shallow water. Spud moorings can be especially susceptible to dynamic processes, such as harbor seiches and earthquakes.

b. Multiple Vessel Moorings

MOORING TYPE	FIGURE NUMBER	DESCRIPTION
Opposite Sides of a Pier	2-4	Vessels can be placed adjacent to one another on opposite sides of a pier to provide some blockage of the environmental forces/moments on the downstream vessel.
Multiple Vessels Next to One Another	2-5	Vessels can be placed adjacent to one another to provide significant blockage of the environmental forces/ moments on the downstream vessel(s).

Figure 2-1. Single Ship, Offset From a Pier With Camels

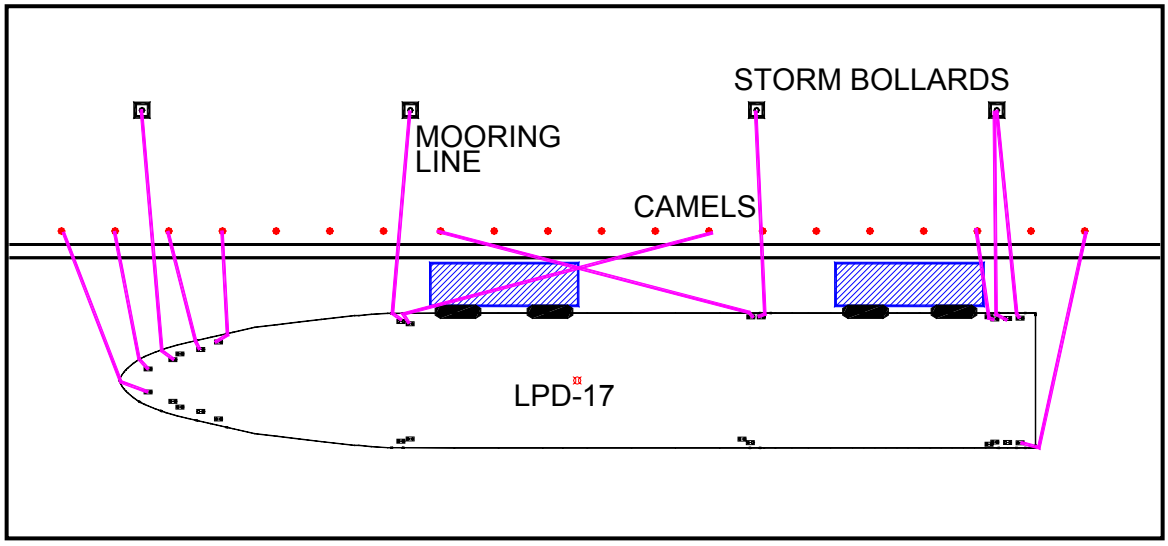

Figure 2-2. Ship at a T-Pier (plan view)

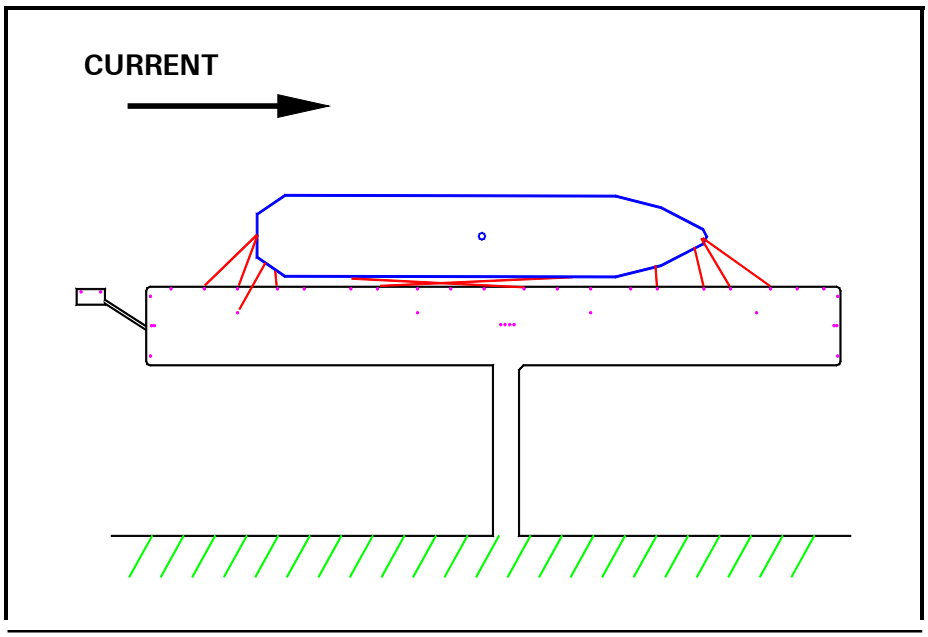

Figure 2-3. Floating Drydock Spud Moored (spuds are secured to a pier, which is not shown, and the floating drydock rides up and down on the spuds; profile view is shown)

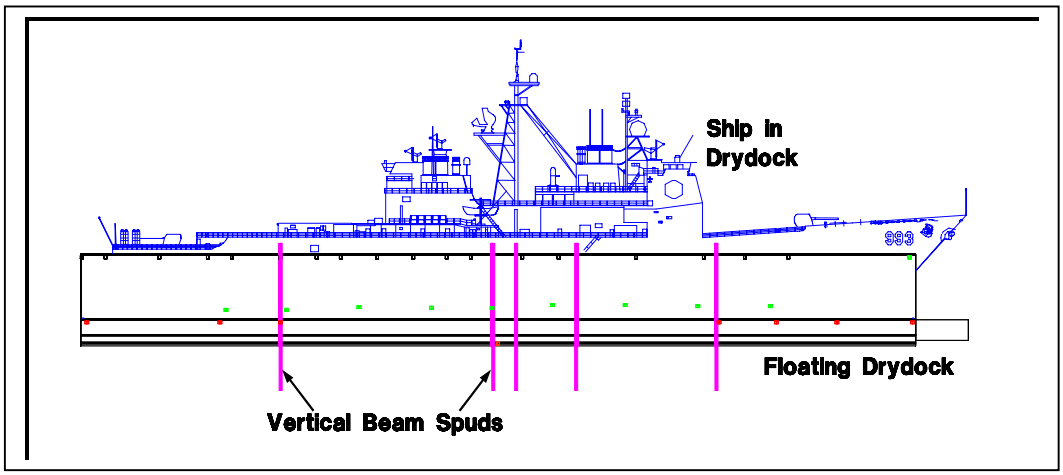

Figure 2-4. Ships on Both Sides of a Pier (plan view)

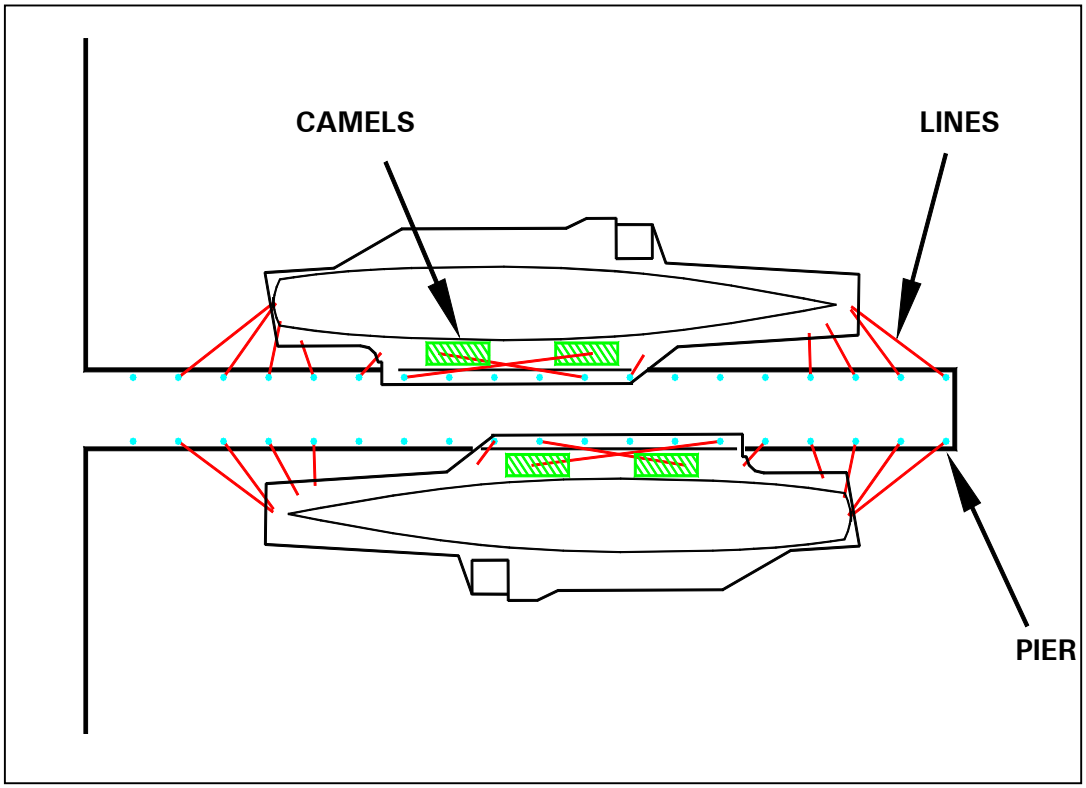

Figure 2-5. Two Ships on One Side of a Pier (plan view)

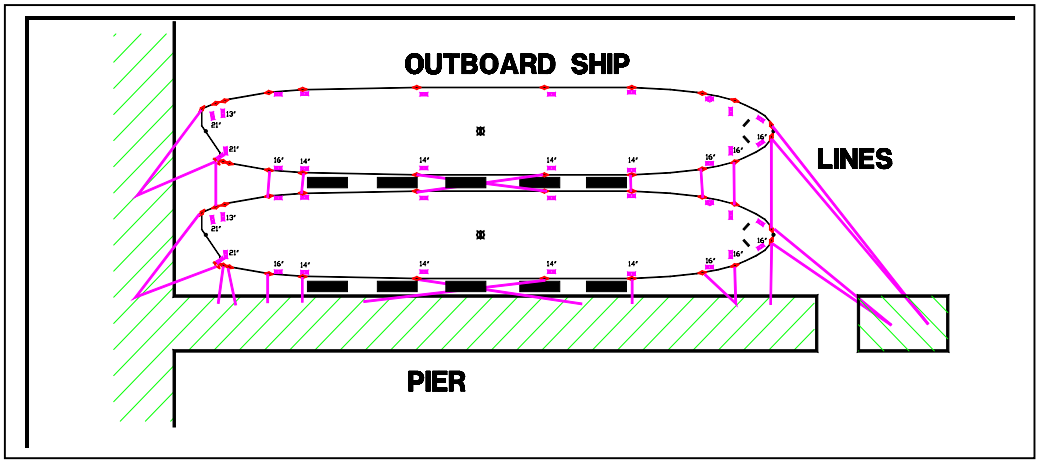

Table 2-2. Examples of Fleet Moorings

a. Vessel Secured at a Single Point

MOORING TYPE	FIGURE NUMBER	DESCRIPTION
At Anchor	2-6	Typical configuration includes the ship deploying a single drag anchor off the bow. This is usually a temporary mooring used as a last resort in benign conditions. A large amount of harbor room is required for the ship swing watch circle. If the wind changes direction dramatically then the anchor will have to reset. Dynamic fishtailing, even under steady winds and currents, may be a problem. Putting out a second anchor in what is known as a Hammerlock mooring may be required in storm anchoring.
Single Mooring Buoy	2-7 2-8	A single point mooring (SPM) buoy is secured to the seafloor typically with 1 to 12 ground legs and either drag or plate anchors. The ship moors to the buoy using an anchor chain or hawser. The vessel weathervanes under the action of forcing, which helps to reduce the mooring load. This type of mooring requires much less room than a ship at anchor because the pivot point is much closer to the vessel. A vessel at a mooring buoy is much less prone to fishtailing than a ship at anchor. Many of the mooring buoys at U.S. Navy facilities around the world are provided under the U.S. Navy's Fleet Mooring Program.

Table 2-2. (continued) Examples of Fleet Moorings

b. Vessel Secured at Two Points

MOORING TYPE	FIGURE NUMBER	DESCRIPTION
Bow-Stern Mooring	2-9	A vessel is moored with one buoy to the bow and another to the stern. This system has a much smaller watch circle than a vessel at a single mooring buoy. Also, two moorings share the load. However, the mooring tension can be much higher if the winds, currents, or waves have a large broadside component to the ship.

c. Vessel Secured at Multiple Points

MOORING TYPE	FIGURE NUMBER	DESCRIPTION
Med-Mooring	2-10	The vessel bow is secured to two mooring buoys and the stern is moored to the end of a pier or wharf. This type of mooring is commonly used for tenders or in cases where available harbor space is limited. Commonly used in the Mediterranean Sea. Hence, the term “Med” Mooring.
Spread Mooring	2-11	Multiple mooring legs are used to secure a vessel. This arrangement of moorings is especially useful for securing permanently or semi-permanently moored vessels, such as floating drydocks and inactive ships. The ship(s) are usually oriented parallel to the current.

Table 2-2. (continued) Examples of Fleet Moorings

d. Multiple Vessel Moorings

MOORING TYPE	FIGURE NUMBER	DESCRIPTION
Nest	2-12 2-13	Multiple tension members are used to secure several vessels together. Separators are used to keep the vessels from contacting one another. Nests of vessels are commonly put into spread moorings. Nested vessels may be of similar size (as for inactive ships) or much different size (as a submarine alongside a tender). Advantages of nesting are: a nest takes up relatively little harbor space and forces/moments on a nest may be less than if the ships were moored individually.

Figure 2-6. Ship at Anchor

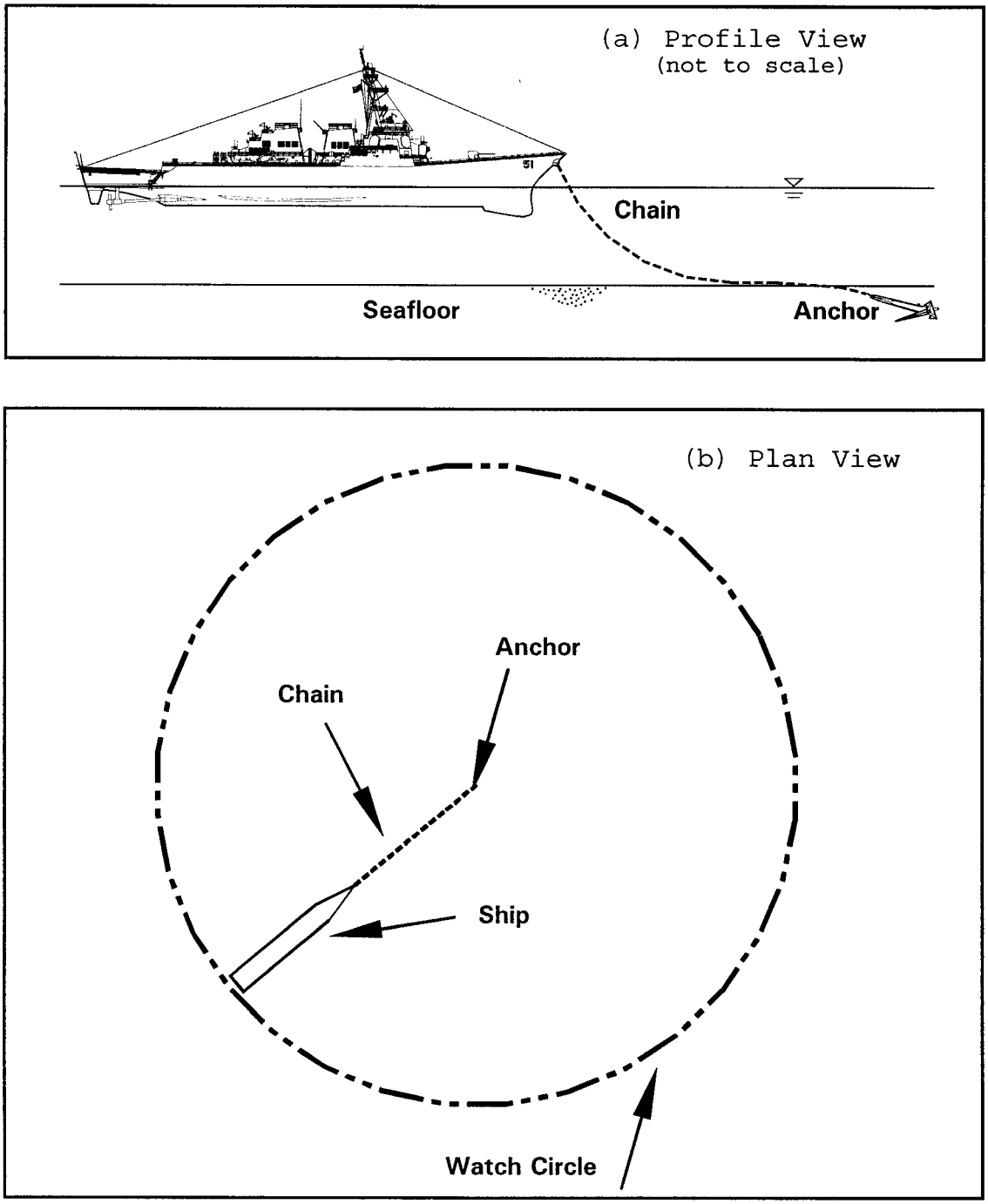

Figure 2-7. Single Point Mooring With Drag Anchors

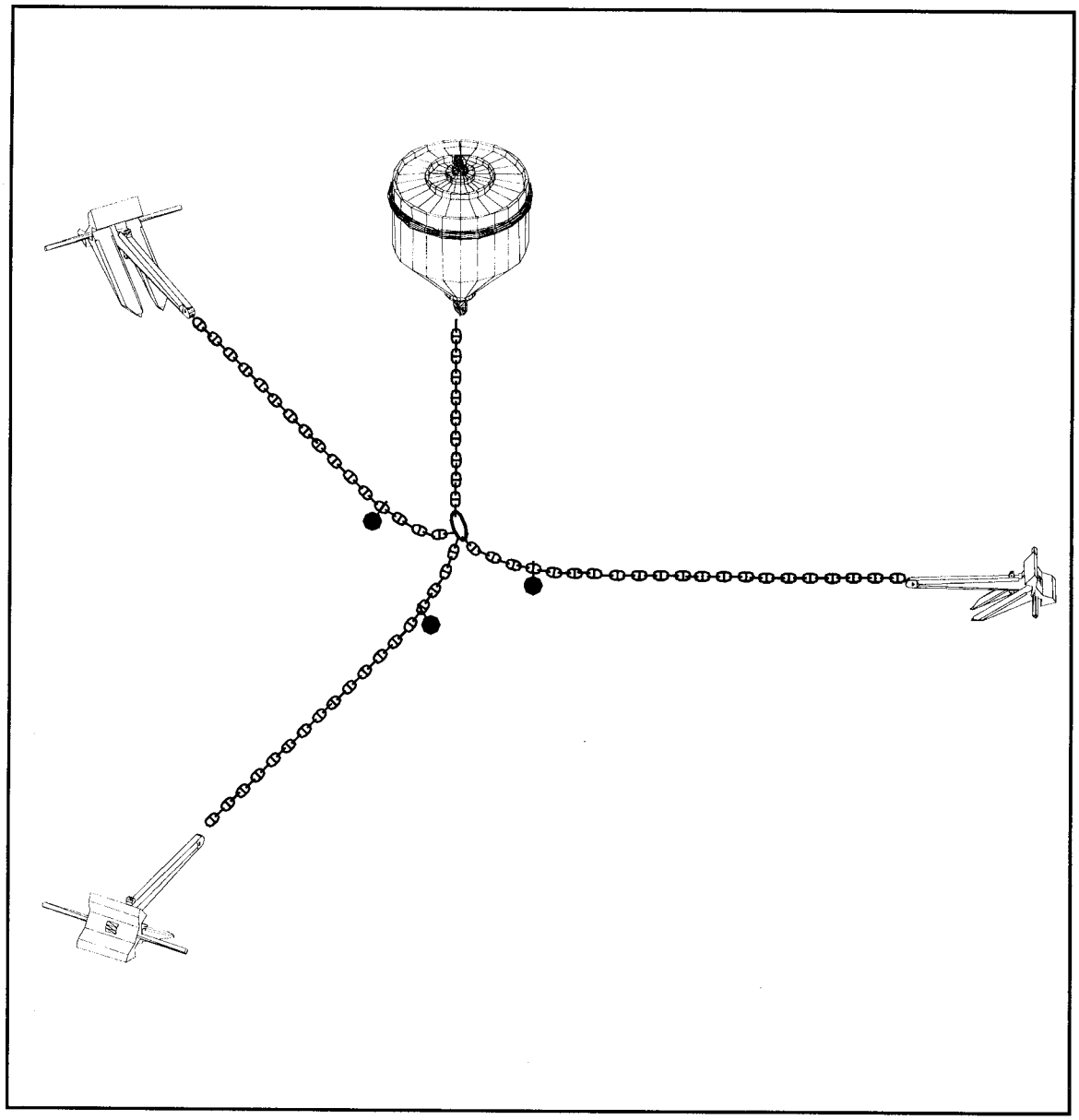

Figure 2-8. Single Point Mooring With a Plate Anchor and a Sinker

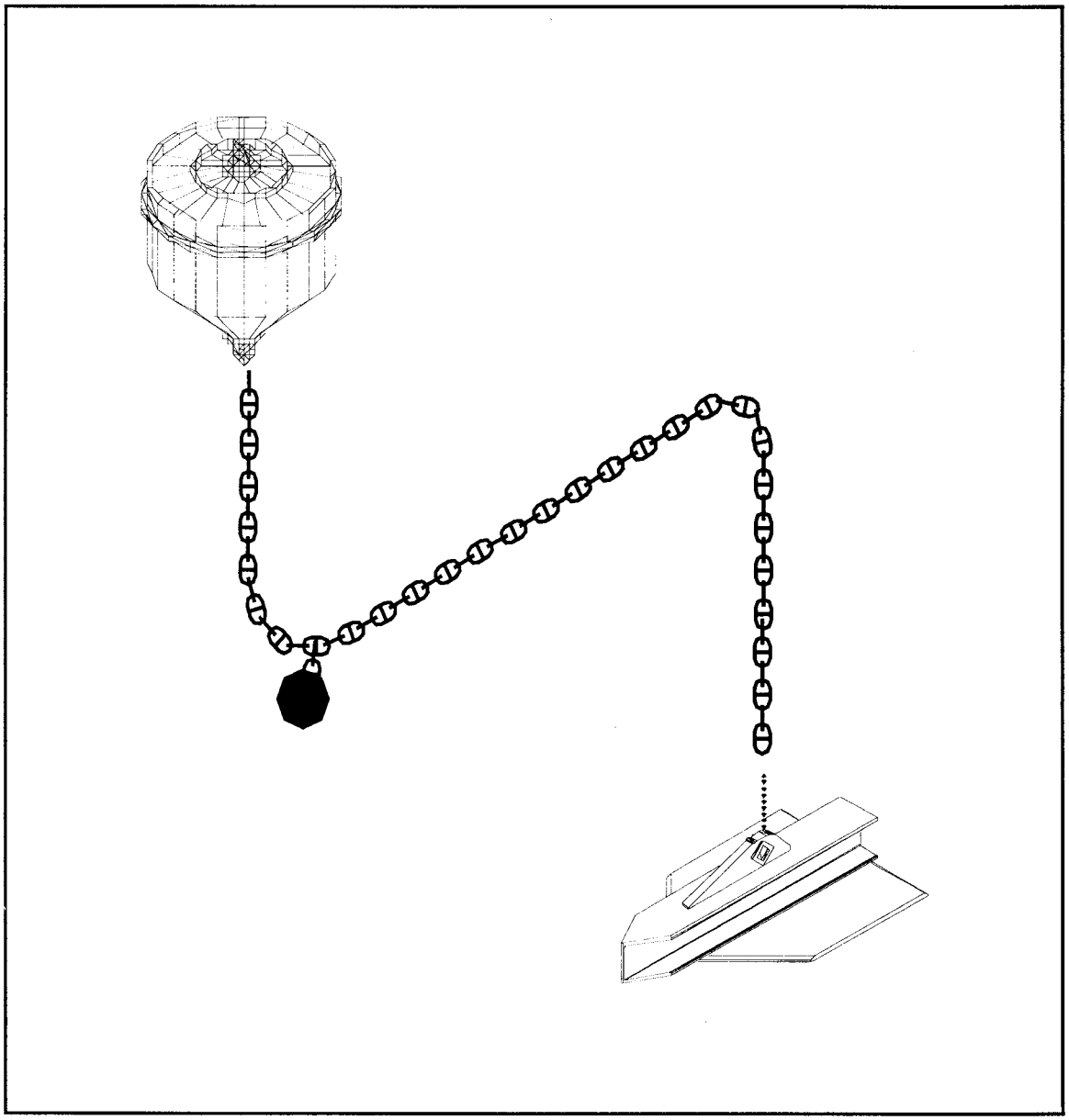

Figure 2-9. Bow-Stern Mooring Shown in Plan View

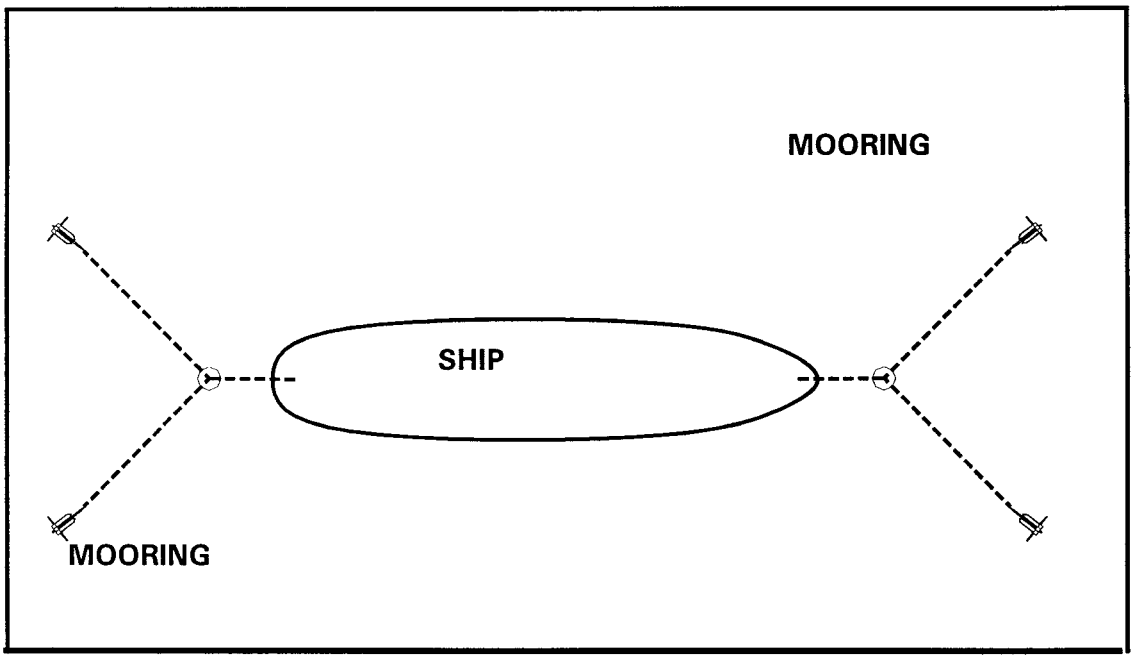

Figure 2-10. Med-Mooring

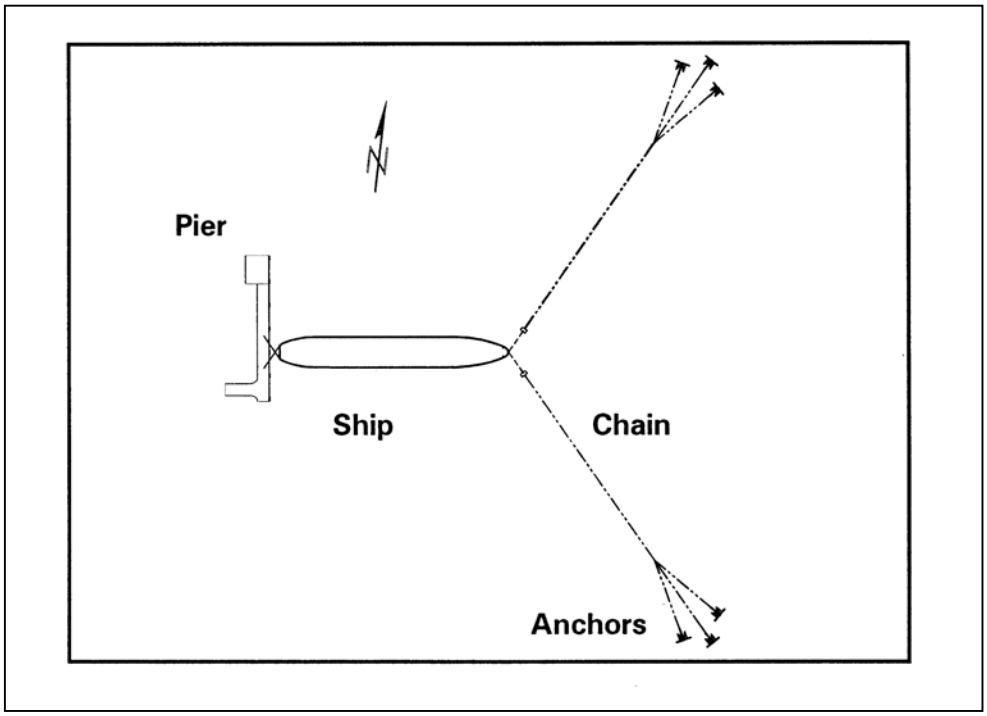

Figure 2-11. Spread Mooring

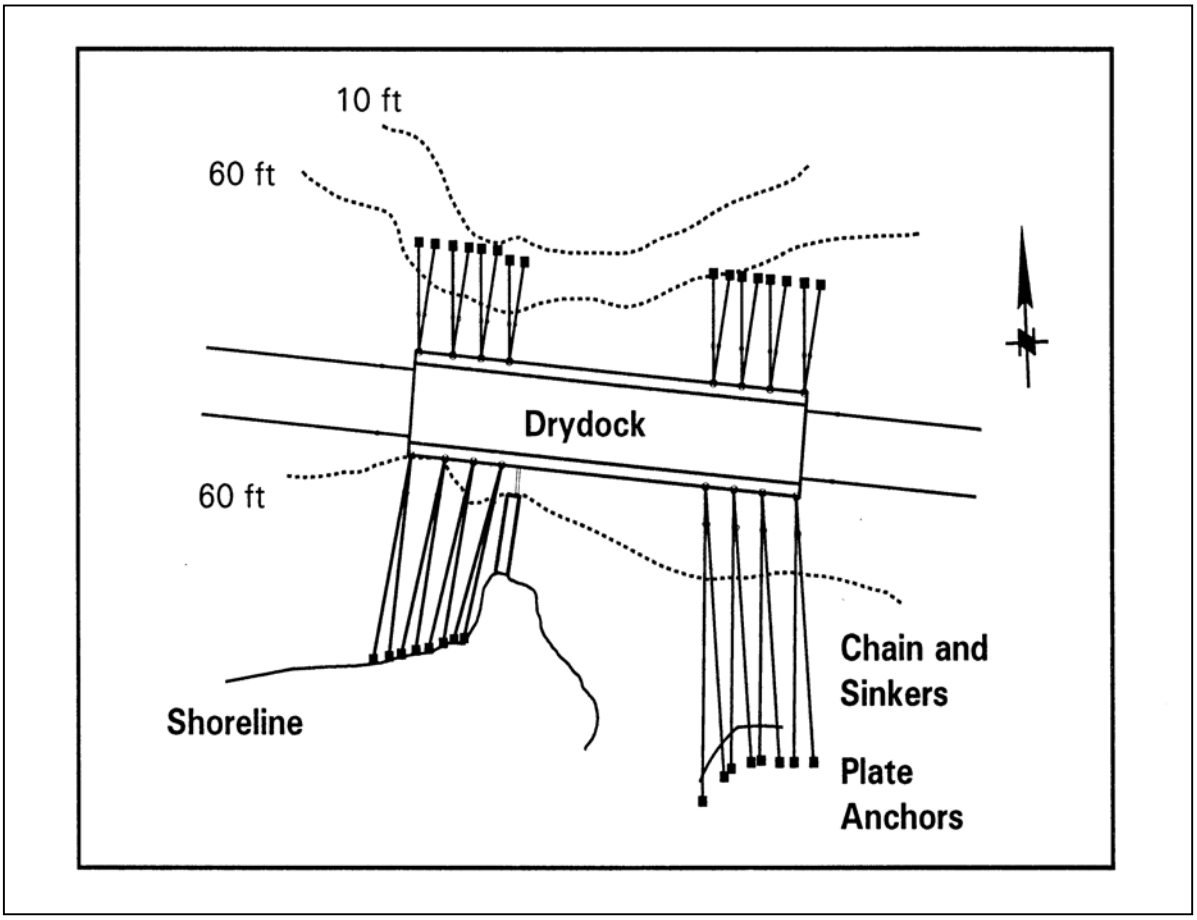

Figure 2-12. Two inactive ships moored at a wharf (separators between ships not shown)

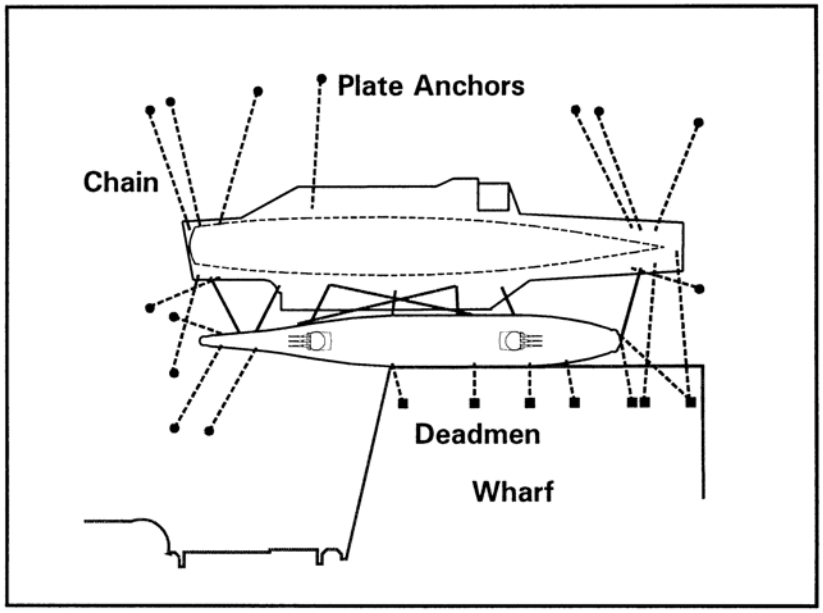

Figure 2-13. Spread Mooring

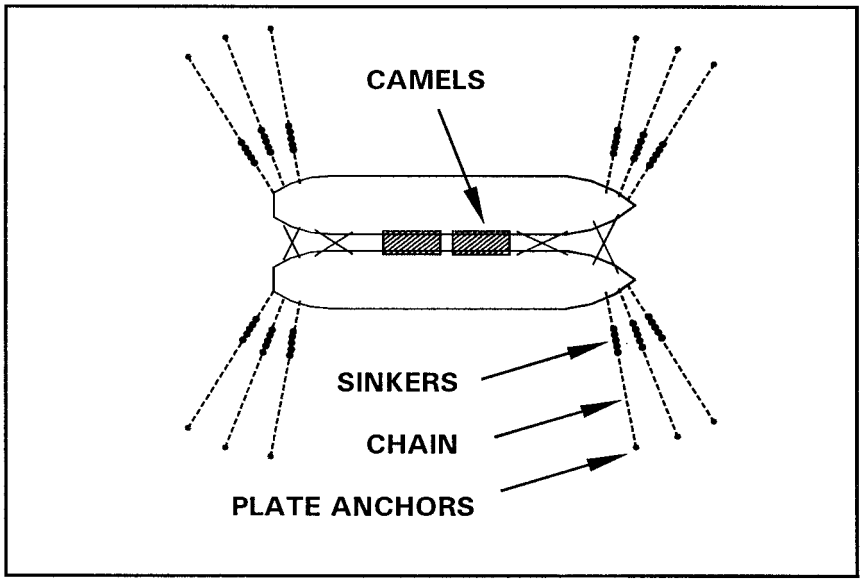

CHAPTER 3

BASIC DESIGN PROCEDURE

3-1 **DESIGN APPROACH.** Begin the design with specified parameters and use engineering principles to complete the design. Types of parameters associated with mooring projects are summarized in Table 3-1. The basic approach to performing mooring design with the facility and ship known is given in Table 3-2.

Table 3-1. Parameters in a Mooring Project

PARAMETER	EXAMPLES
1. Operational Parameters	Required ship position, amount of motion allowed
2. Ship Configuration	Basic ship parameters, such as length, width, draft, displacement, wind areas, mooring fitting locations, wind/current force, and moment coefficients
3. Facility Configuration	Facility location, water depth, dimensions, locations/type/capacity of mooring fittings/fenders, facility condition, facility overall capacity
4. Environmental Parameters	Wind speed, current speed and direction, water levels, wave conditions and possibility of ice
5. Mooring Configuration	Number/size/type/location of tension members, fenders, camels, etc.
6. Material Properties	Stretch/strain characteristics of the mooring tension and compression members

Table 3-2. Basic Mooring Design Approach With Known Facility for a Specific Site and a Specific Ship

STEP	NOTES
Define customer(s) requirements	Define the ship(s) to be moored, the type of service required, the maximum allowable ship motions, and situations under which the ship will leave.
Determine planning requirements	Define the impact/interaction with other facilities and operations, evaluate explosive arcs, determine permit requirements, establish how the mooring is to be used, review the budget and schedule.
Environmental Impact Assessments	Prepare any required studies and paperwork.
Define site and environmental parameters	Determine the water depth(s), engineering soil parameters, design winds, design currents, design waves, design water levels, and evaluate access.
Ship characteristics	Find the characteristics of the ship(s) including sail areas, drafts, displacements, ship mooring fittings, allowable hull pressures, and other parameters.
Ship forces/moments	Determine the forces, moments, and other key behaviors of the ship(s).
Evaluate mooring alternatives	Evaluate the alternatives in terms of safety, risk, cost, constructability, availability of hardware, impact on the site, watch circle, compatibility, maintenance, inspectability, and other important aspects.
Design Calculations	Perform static and/or dynamic analyses (if required) for mooring performance, anchor design, fender design, etc
Notifications	Prepare Notice to Mariners for the case of in-water construction work and notify charting authorities concerning updating charts for the area.

Table 3-2. (continued) Basic Mooring Design Approach With Known Facility for a Specific Site and a Specific Ship

STEP	NOTE
Plans/Specs	Prepare plans, specifications, and cost estimates.
Permits	Prepare any required environmental studies and obtain required permits.
Installation planning	Prepare instructions for installation, including safety and environmental protection plans.
Installation monitoring	Perform engineering monitoring of the installation process.
Testing	Perform pull tests of all anchors in mooring facilities to ensure that they hold the required load.
Documentation	Document the design and as-built conditions with drawings and reports.
Instructions	Provide diagrams and instructions to show the customer how to use and inspect the mooring.
Inspection	Perform periodic inspection/testing of the mooring to assure it continues to meet the customer(s) requirements.
Maintenance	Perform maintenance as required and document on as-built drawings.

3-2 **GENERAL DESIGN CRITERIA.** General design issues shown in Table 3-3 should be addressed during design to help ensure projects meet customers' needs.

Table 3-3. Design Issues

CRITERIA	NOTES
Vessel operating conditions	Under what conditions will the vessel(s) exit? What are the operating mission requirements for the ship? What is the maximum allowable hull pressure?
Allowable motions	How much ship motion in the six degrees-of-freedom will be allowable for the moored ship? This is related to brow positions and use, utilities, ship loading and unloading operations, and other requirements. Note that most ships have a very high buoyancy force and moorings should be designed to allow for water level changes at a site.
User skills	Is the user trained and experienced in using the proposed system? What is the risk that the mooring would be improperly used? Can a design be formulated for easy and reliable use?
Flexibility	How flexible is the design? Can it provide for new mission requirements not yet envisioned? Can it be used with existing facilities/ships?
Constructability	Does the design specify readily available commercial products and is it able to be installed and/or constructed using standard techniques, tolerances, etc.?
Cost	Are initial and life cycle costs minimized?
Inspection	Can the mooring system be readily inspected to ensure continued good working condition?
Maintenance	Can the system be maintained in a cost-effective manner?
Special requirements	What special requirements does the customer have? Are there any portions of the ship that cannot come in contact with mooring elements (e.g., submarine hulls)?

3-2.1 **Mooring Service Types.** Four Mooring Service Types are defined to help identify minimum design requirements associated with DoD ships and piers, and determine operational limitations. Facility and ship mooring hardware should accommodate the service types shown in Table 3-4.

Table 3-4. Mooring Service Types

MOORING SERVICE TYPE	DESCRIPTION
TYPE I Mild Weather Mooring	This category covers moorings for mild weather (sustained winds of less than 35 knots; below gale force) and currents less than 1 knot. Mooring situations include ammunition facilities, fueling facilities, deperming facilities, and ports of call. Use of these moorings is normally selected in concert with forecasted weather.
TYPE II TYPE IIA Standard Mooring TYPE IIB Storm Mooring	This category covers moorings that are used through storm conditions. Moorings include standard, storm and nested configurations. Vessel will normally leave prior to an approaching hurricane, typhoon, surge or other extreme event. Naval ships intend to go to sea if 50 knot winds are expected, but storms may come up quickly, so higher design winds are recommended. MST IIA covers mooring in winds of 50 knots or less in broadside currents of 1-1/2 knots or less. The practice is to provide for full pier operation for MST IIA. MST IIB covers mooring in winds of 64 knot or less in broadside currents of a 2 knots or less. This is the intended Navy ship mooring design requirement. It is encouraged for general home porting because sudden storms can produce high winds on short notice. Pier operations may be impacted for MST IIB if lines must be run across a pier.
TYPE III Heavy Weather Mooring	This category covers moorings of vessels that cannot or may not get underway prior to an approaching hurricane or typhoon. Moorings include fitting-out, repair, drydocking, and overhaul berthing facilities.
TYPE IV Permanent Mooring	This category covers moorings that are used to permanently moor a vessel that will not leave in case of a hurricane, typhoon, or surge. Moorings include inactive ships, floating drydocks, ship museums, training berthing facilities, etc.

3-2.2 **Facility Design Criteria for Mooring Service Types.** Mooring facilities are designed conforming to the site specific environmental criteria given in Table 3-5. Table 3-5 gives design criteria in terms of environmental design return intervals, R, and in terms of probability of exceedence, P, for 1 year of service life, N=1. The ship usually has the responsibility for providing mooring lines for Mooring Service Types I and II, while the facility usually provides mooring lines for Mooring Service Types III and IV.

3-2.3 **Ship Hardware Design Criteria for Mooring Service Types.** Ship mooring hardware needs to be designed to accommodate various modes of ship operation. During Type II operation, a ship may be moored in relatively high broadside

current and get caught by a sudden storm, such as a thunderstorm. Type III mooring during repair may provide the greatest potential of risk, because the ship is moored for a significant time and cannot get underway. There are several U.S. shipyards where DOD ships can undergo major repairs. The area near Norfolk/Portsmouth, VA has some of the most extreme design criteria, so ship's hardware design should be based on conditions derived from this site. Ship mooring hardware environmental design criteria are given in Table 3-6. During Type IV mooring, the ship is usually aligned with the current, extra padeyes can be welded to the ship hull for mooring, etc., so special provisions can be made for long-term storage.

3-2.4 **Strength.** Moorings should be designed and constructed to safely resist the nominal loads in load combinations defined herein without exceeding the appropriate allowable stresses for the mooring components. Normal wear of materials and inspection methods and frequency need to be considered. Due to the probability of simultaneous maximum occurrences of variable loads, no reduction factors should be used.

3-2.5 **Serviceability.** Moorings should be designed to have adequate stiffness to limit deflections, vibration, or any other deformations that adversely affect the intended use and performance of the mooring. At the same time moorings need to be flexible enough to provide for load sharing, reduce peak dynamic loads and allow for events, such as tidal changes.

Table 3-5. Facility Design Criteria for Mooring Service Types

MOORING SERVICE TYPE	WIND*	CURRENT**	WATER LEVEL	WAVES
TYPE I	Less than 35 knots	1 knot or less	mean lower low to mean higher high	N.A.
TYPE IIA	V_w=50 knots (max.)	1.5-knot max.	extreme low to mean higher high	P=1 or R=1 yr
TYPE IIB	V_w=64 knots (max.)	2.0-knot max.	extreme low to mean higher high	P=1 or R=1 yr
TYPE III	P=0.02 or R=50 yr	P=0.02 or R=50 yr	extreme low to mean higher high	P=0.02 or R=50 yr
TYPE IV	P=0.01 or R=100 yr	P=0.01 or R=100 yr	extreme water levels	P=0.01 or R=100 yr

*Use exposure D (UFC 1-200-01 Design: General Building Requirements; flat, unobstructed area exposed to wind flowing over open water for a distance of at least 1 mile or 1.61 km) for determining design wind speeds. Note that min. = minimum return interval or probability of exceedence used for design; max. = maximum wind speed used for design.

**To define the design water depth for ship mooring systems, use T/d=0.9 for flat keeled ships; for ships with non-flat hulls, that have sonar domes or other projections, take the ship draft, T, as the mean depth of the keel and determine the water depth, d, by adding 0.61 meter (2 feet) to the maximum navigation draft of the ship (note, may vary depending on sonar dome size)

Table 3-6. Ship Mooring Hardware Design Criteria

a. Ship Anchor Systems*

VESSEL TYPE	MINIMUM WATER DEPTH	MINIMUM WIND SPEED	MINIMUM CURRENT SPEED
Ships	240 ft 73 m	70 knots 32.9 m/s	4 knots 1.54 m/s
Submarines	120 ft 36.6 m	70 knots 36.0 m/s	4 knots 2.06 m/s

b. Ship Mooring Systems**

MOORING SERVICE TYPE	MINIMUM WIND SPEED	MINIMUM CURRENT SPEED
Type I	35 knots 18.0 m/s	1 knot 0.51 m/s
Type II***	64 knots 33.0 m/s	2 knots 1.03 m/s
Type III	95 knots 48.9 m/s	2 knots 1.03 m/s

*Quasi-static design assuming wind and current are co-linear for ship and submarine anchor systems (after NAVSEASYSCOM DDS-581).

**To define the design water depth, use T/d=0.9 for flat keeled ships; for ships with non-flat hulls, that have sonar domes or other projections, take the ship draft, T, as the mean depth of the keel and determine the water depth, d, by adding 0.61 meter (2 feet) to the maximum navigation draft of the ship (note, may vary depending on sonar dome size).

***Ships need to carry lines suitable for MST IIB.

3-2.6 **Design Methods.** All moorings should be designed by skilled/knowledgeable professional personnel. Methods must be used that assure that ships are safely moored. Below are some guidelines.

Mooring Service Type I and II moorings can often be designed using quasi-static tools with 3 degrees-of-freedom (surge, sway and yaw). Examples of tools include FIXMOOR (Note: FIXMOOR is available from NAVFAC Atlantic CIENG WATERS TOOLBOX; hereinafter referred to as WATERS TOOLBOX), OPTIMOOR, AQWA LIBRIUM, etc. Specialized tools need to be considered for cases of high currents, high tidal ranges, passing ship effects, ship waves, multiple/nested ships, situations that are likely to be dynamic and other specialized cases. It is valuable to ships' and port operations personnel to provide generalized mooring designs for Mooring Service Types I and II.

Mooring Service Types III and IV must be designed on a case-by-case basis using dynamic methods because of the extremely high loading that occurs during extreme storms. It is recommended that NFESC be contacted concerning the design of these types of moorings.

3-2.7 **General Mooring Integrity.** For multiple-member moorings, such as for a ship secured to a pier by a number of lines, the mooring system strongly relies on load sharing among several members. If one member is lost, the ship should remain moored. Therefore, design multiple member mooring to ensure that remaining members maintain a factor of safety at least 75 percent of the intact mooring factors of safety shown in Table 3-7 with any one member missing.

3-2.8 **Quasi-Static Safety Factors.** Table 3-7 gives recommended minimum factors of safety for "quasi-static" design based on material reliability.

3-2.9 **Allowable Ship Motions.** Table 3-8 gives recommended operational ship motion criteria for moored vessels. Table 3-8(a) gives maximum wave conditions for manned and moored small craft (Permanent International Association of Navigation Congresses (PIANC), *Criteria for Movements of Moored Ships in Harbors; A Practical Guide*, 1995). These criteria are based on comfort of personnel on board a small boat, and are given as a function of boat length and locally generated.

Table 3-8(b) gives recommended motion criteria for safe working conditions for various types of vessels (PIANC, 1995).

Table 3-8(c) gives recommended velocity criteria and Table 3-8(d) and (e) give special criteria.

Table 3-7. Minimum Quasi-Static Factors of Safety

COMPONENT	MINIMUM FACTOR OF SAFETY	NOTES
Stockless & balanced fluke anchors	1.5	For ultimate anchoring system holding capacity; use 1.0 for ship's anchoring*
High efficiency drag anchors	2.0	For ultimate anchoring system holding capacity use 1.0 for ship's anchoring*
Fixed anchors (piles & plates)	3.0	For ultimate anchoring system holding capacity*
Deadweight anchors	-	Use carefully (see Naval Civil Engineering Laboratory (NCEL) *Handbook for Marine Geotechnical Engineering*, 1985)
Chain	3.0 4.0	For relatively straight lengths. For chain around bends. These factors of safety are for the new chain break strength.
Wire rope	3.0	For the new wire rope break strength.
Synthetic line**	3.0	For new line break strength.
Ship bitts	***	Use American Institute of Steel Construction (AISC) code.
Pier bollards	***	Use AISC & other applicable codes.

*It is recommended that anchors be pull tested.
**Reduce effective strength of wet nylon line by 15 percent.
*** For mooring fittings take 3 parts of the largest size of line used on the fitting; apply a load of: 3.0*(minimum line break strength)*1.3 to determine actual stresses, $\sigma_{act.}$; design fittings so ($\sigma_{act.}$/ $\sigma_{allow.}$)<1.0, where $\sigma_{allow.}$ is the allowable stress from AISC and other applicable codes.

Table 3-8. Recommended Practical Motion Criteria for Moored Vessels

(a) Safe Wave Height Limits for Moored Manned Small Craft
(after PIANC, 1995)

	Beam/Quartering Seas		Head Seas	
Vessel Length (m)	Wave Period (sec)	Maximum Sign Wave Height, H_s (m)	Wave Period (sec)	Maximum Sign Wave Height, H_s (m)
4 to 10	<2.0	0.20	<2.5	0.20
“	2.0-4.0	0.10	2.5-4.0	0.15
“	>4.0	0.15	>4.0	0.20
10-16	<3.0	0.25	<3.5	0.30
“	3.0-5.0	0.15	3.5-5.5	0.20
“	>5.0	0.20	>5.5	0.30
20	<4.0	0.30	<4.5	0.30
“	4.0-6.0	0.15	4.5-7.0	0.25
“	>6.0	0.25	>7.0	0.30

Table 3-8. (continued) Recommended Practical Motion Criteria for Moored Vessels

(b) Recommended Motion Criteria for Safe Working Conditions[1] (after PIANC, 1995)

Vessel Type	Cargo Handling Equipment	Surge (m)	Sway (m)	Heave (m)	Yaw (°)	Pitch (°)	Roll (°)
Fishing vessels 10-3000 GRT[2]	Elevator crane Lift-on/off Suction pump	0.15 1.0 2.0	0.15 1.0 1.0	- 0.4 -	- 3 -	- 3 -	- 3 -
Freighters& coasters <10000 DWT[3]	Ship's gear Quarry cranes	1.0 1.0	1.2 1.2	0.6 0.8	1 2	1 1	2 3
Ferries, Roll-On/ Roll-Off (RO/RO)	Side ramp[4] Dew/storm ramp Linkspan Rail ramp	0.6 0.8 0.4 0.1	0.6 0.6 0.6 0.1	0.6 0.8 0.8 0.4	1 1 3 -	1 1 2 1	2 4 4 1
General cargo 5000-10000 DWT	-	2.0	1.5	1.0	3	2	5
Container vessels	100% efficient 50% efficient	1.0 2.0	0.6 1.2	0.8 1.2	1 1.5	1 2	3 6
Bulk carriers 30000-150000 DWT	Cranes Elevator/ bucket-wheel Conveyor belt	2.0 1.0 5.0	1.0 0.5 2.5	1.0 1.0 -	2 2 3	2 2 -	6 2 -
Oil tankers	Loading arms	3.0[5]	3.0	-	-	-	-
Gas tankers	Loading arms	2.0	2.0	-	2	2	2

Notes for Table 3-8(b):
[1]Motions refer to peak-to-peak values (except for sway, which is zero-to-peak)
[2]GRT = Gross Registered Tons expressed as internal volume of ship in units of 100 ft^3 (2.83 m^3)
[3]DWT = Dead Weight Tons, which is the total weight of the vessel and cargo expressed in long tons (1016 kg) or metric tons (1000 kg)
[4]Ramps equipped with rollers.
[5]For exposed locations, loading arms usually allow for 5.0-meter motion.

Table 3-8. (continued) Recommended Practical Motion Criteria for Moored Vessels

(c) Recommended Velocity Criteria for Safe Mooring Conditions for Fishing Vessels, Coasters, Freighters, Ferries and Ro/Ro Vessels (after PIANC, 1995)

Ship Size(DWT)	Surge (m/s)	Sway (m/s)	Heave (m/s)	Yaw (^{o}/s)	Pitch (^{o}/s)	Roll (^{o}/s)
1000	0.6	0.6	-	2.0	-	2.0
2000	0.4	0.4	-	1.5	-	1.5
8000	0.3	0.3	-	1.0	-	1.0

(d) Special Criteria for Walkways and Rail Ramps
(after PIANC, 1995)

Parameter	Maximum Value
Vertical velocity	0.2 m/s
Vertical acceleration	0.5 m/s^2

Table 3-8. (Continued) Recommended Practical Motion Criteria for Moored Vessels

(e) Special Criteria

CONDITION	MAXIMUM AMPLITUDE VALUES	NOTES
Heave	-	Ships will move vertically with any long period water level change (tide, storm surge, flood, etc.). The resulting buoyancy forces may be high, so the mooring must be designed to provide for these motions due to long period water level changes.
Loading/unloading preposition ships	0.6 m (2 feet)	Maximum ramp motion during loading/unloading moving wheeled vehicles.
Weapons loading/unloading	0.6 m (2 feet)	Maximum motion between the crane and the object being loaded/unloaded.

3-3 DESIGN METHODS

3-3.1 **Quasi-Static Design.** Practical experience has shown that in many situations such as for Mooring Service Types I and II, static analysis tools, such as FIXMOOR (WATERS TOOLBOX), OPTIMOOR and AQWA LIBRIUM, can be used to reliably determine mooring designs in harbors. Winds are a key forcing factor in mooring harbors. Winds can be highly dynamic in heavy weather conditions. However, practical experience has shown that for typical DOD ships, a wind speed with a duration of 30 seconds can be used, together with static tools, to develop safe mooring designs. The use of the 30-second duration wind speed with static tools and the approach shown in Table 3-9 is called “quasi-static” design.

Table 3-9. Quasi-Static Design Notes

CRITERIA	NOTES
Wind speed	Determine for the selected return interval, R. For typical ships use the wind that has a duration of 30 seconds at an elevation of 10 m.
Wind direction	Assume the wind can come from any direction except in cases where wind data show extreme winds occur in a window of directions.
Current speed	Use conditions for the site (speed and direction).
Water levels	Use the range for the site.
Waves	Neglected. If waves are believed to be important, then dynamic analyses are recommended.
Factors of safety	Perform the design using quasi-static forces and moments (see Chapter 4), minimum factors of safety in Table 3-7, and design to assure that all criteria are met.

3-3.2 **Dynamic Mooring Analysis.** Conditions during Mooring Service Types III and IV, and during extreme events can be highly dynamic. Unfortunately, the dynamic behavior of a moored ship in shallow water can be highly complex, so dynamics cannot be fully documented in this UFC. An introduction to dynamics is provided in Chapter 8. Information on dynamics is found in: Dynamic Analysis of Moored Floating Drydocks, Headland et. al. (1989); Advanced Dynamics of Marine Structures, Hooft (1982); Hydrodynamic Analysis and Computer Simulation Applied to Ship Interaction During Maneuvering in Shallow Channels, Kizakkevariath (1989); David Taylor Research Center (DTRC), SPD-0936-01, User's Manual for the Standard Ship Motion Program, SMP81; Low Frequency Second Order Wave Exciting Forces on Floating Structures, Pinkster (1982); Mooring Dynamics Due to Wind Gust Fronts, Seelig and Headland (1998); and A Simulation Model for a Single Point Moored Tanker, Wichers (1988). Some conditions when mooring dynamics may be important to design or when specialized considerations need to be made are given in Table 3-10.

The programs AQWA DRIFT and AQWA NAUT (Century Dynamics, Houston, TX) are examples of software tools that can be used to simulate highly dynamic mooring situations.

3-4 **RISK.** Risk is a concept that is often used to design facilities, because the probability of occurrence of extreme events (currents, waves, tides, storm surge, earthquakes, etc.) is strongly site dependent. Risk is used to ensure that systems are reliable, practical, and economical.

A common way to describe risk is the concept of 'return interval', which is the mean length of time between events. For example, if the wind speed with a return interval of R = 100 years is given for a site, this wind speed would be expected to occur, on the average, once every 100 years. However, since wind speeds are probabilistic, the specified 100-year wind speed might not occur at all in any 100-year period. Or, in any 100-year period the wind speed may be equal to or exceed the specified wind speed multiple times.

The probability or risk that an event will be equaled or exceeded one or more times during any given interval is determined from:

EQUATION: $$P = 100\% * (1 - (1 - 1/R)^N) \quad (1)$$

where

P = probability, in percent, of an event being equaled or exceeded one or more times in a specified interval
R = return interval (years)
N = service life (years)

Figure 3-1 shows risk versus years on station for various selected values of return interval. For example, take a ship that is on station at a site for 20 years (N = 20). There is a P = 18.2 percent probability that an event with a return interval of R = 100 years or greater will occur one or more times at a site in a 20-year interval.

Table 3-10. Conditions Requiring Special Analysis

FACTOR	SPECIAL ANALYSIS REQUIRED
Wind	> 45 mph for small craft > 75 mph for larger vessels
Wind waves	> 1.5 ft for small craft > 4 ft for larger vessels
Wind gust fronts	Yes for SPMs
Current	> 3 knots
Ship waves and passing ship effects	Yes for special cases (see Kizakkevariath, 1989; Occasion, 1996; Weggel and Sorensen, 1984 & 1986)
Long waves (seiches and tidal waves or tsunamis)	Yes
Berthing and using mooring as a break	Yes (see MIL-HDBK-1025/1)
Parting tension member	May be static or dynamic
Ship impact or other sudden force on the ship	Yes (if directed)
Earthquakes (spud moored or stiff systems)	Yes
Explosion, landslide, impact	Yes (if directed)
Tornado (reference NUREG 1974)	Yes
Flood, sudden water level rise	Yes (if directed)
Ice forcing	Yes (if a factor)
Ship/mooring system dynamically unstable (e.g., SPM)	Yes (dynamic behavior of ships at SPMs can be especially complex)
Forcing period near a natural period of the mooring system	Yes; if the forcing period is from 80% to 120% of a system natural period

Note: SPM = single point mooring

Figure 3-1. Risk Diagram

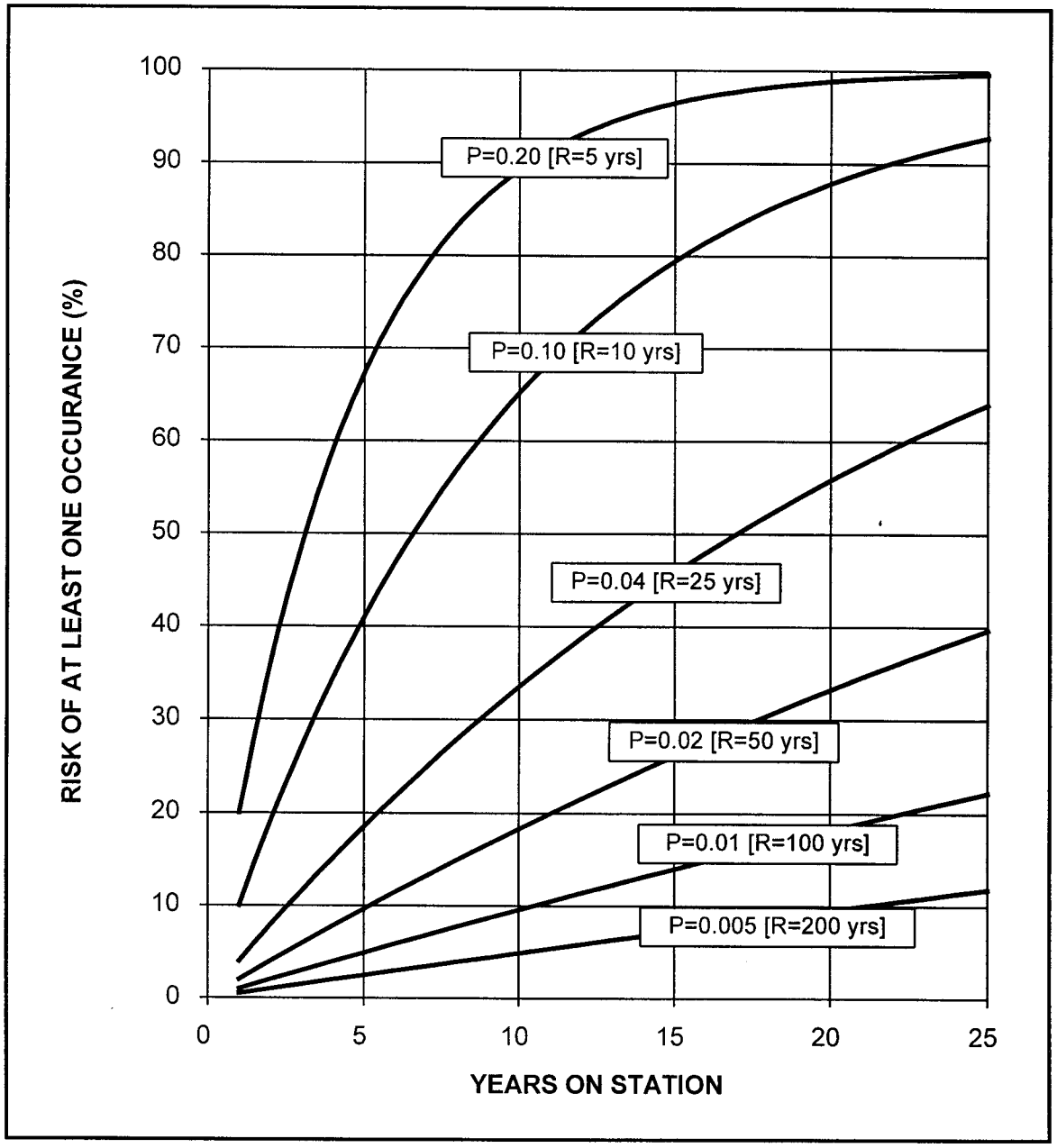

3-5 **COORDINATE SYSTEMS.** The various coordinate systems used for ships and mooring design are described below.

3-5.1 **Ship Design/Construction Coordinates.** A forward perpendicular point (FP), aft perpendicular point (AP), and regular spaced frames along the longitudinal axes of the ship are used to define stations. The bottom of the ship keel is usually used as the reference point or "baseline" for vertical distances. Figure 3-2 illustrates ship design coordinates.

3-5.2 **Ship Hydrostatics/Hydrodynamics Coordinates.** The forward perpendicular is taken as Station 0, the aft perpendicular is taken as Station 20, and various cross-sections of the ship hull (perpendicular to the longitudinal axis of the ship) are used to describe the shape of the ship hull. Figure 3-2 illustrates ship hydrostatic conventions.

3-5.3 **Local Mooring Coordinate System.** Environmental forces on ships are a function of angle relative to the vessel's longitudinal centerline. Also, a ship tends to move about its center of gravity. Therefore, the local "right-hand-rule" coordinate system, shown in Figure 3-3, is used in this UFC. The midship's point is shown as a convenient reference point in Figures 3-3 and 3-4.

3-5.4 **Global Coordinate System.** Plane state grids or other systems are often used to describe x and y coordinates. The vertical datum is most often taken as relative to some water level, such as mean lower low water (MLLW).

3-5.5 **Ship Conditions.** Loading conditions are defined in NAVSEA NSTM 096. There are three common conditions or displacements that a ship has at various stages including:

- "Light Condition" – This is the ship condition after first launching.
- "One-Third Stores Condition" – This is the typical ship condition during ship repair, as indicated in SUPSHIP docking/undocking records.
- "Fully Loaded Condition" – This is the ship condition during operations.

Figure 3-2. Ship Design and Hydrostatic Coordinates

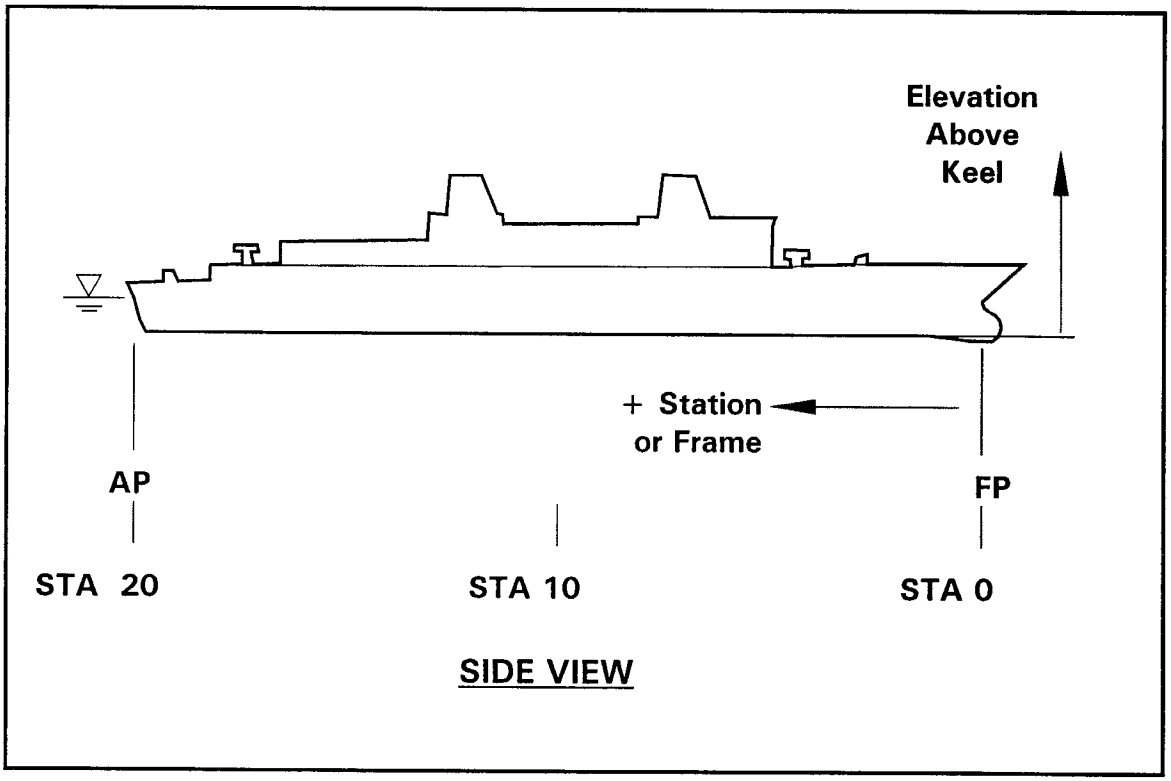

Figure 3-3. Local Mooring Coordinate System for a Ship

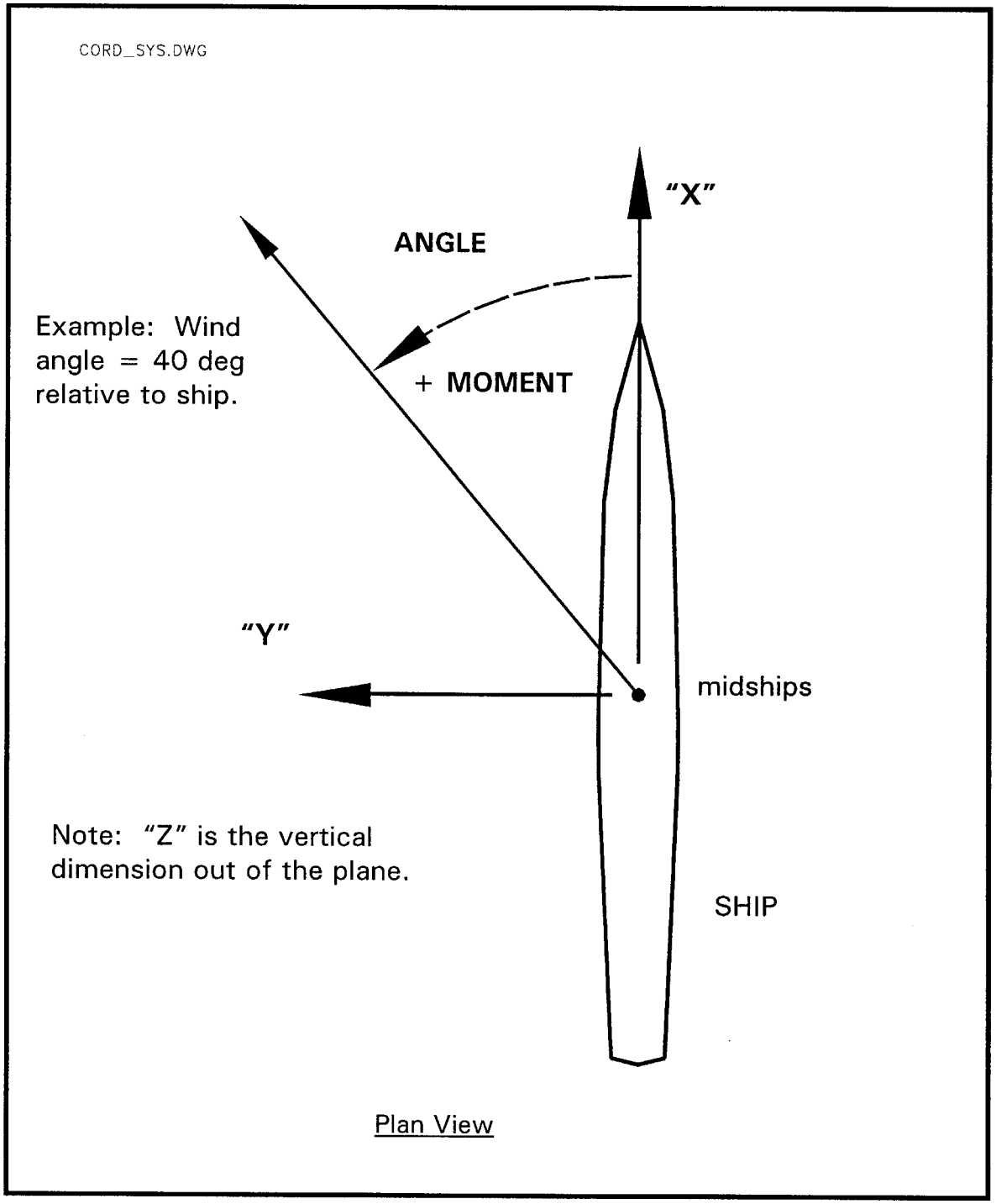

Figure 3-4. Local Mooring Coordinate System for a Ship

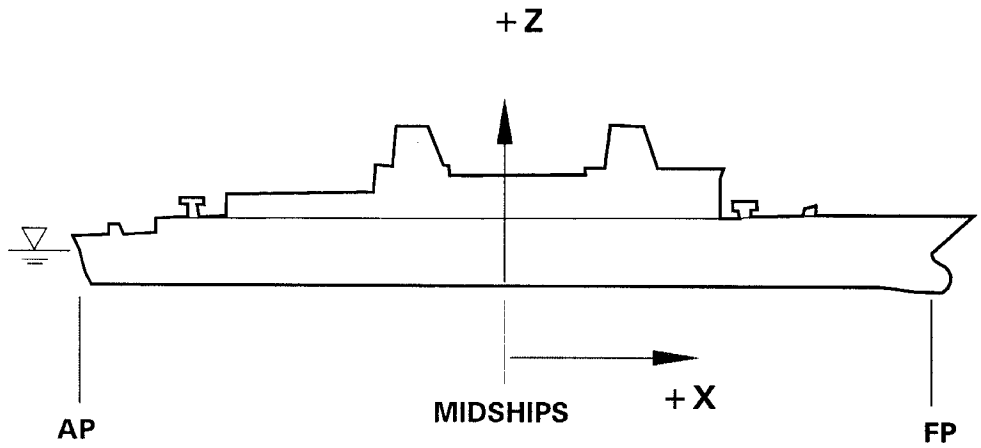

AP = Aft perpendicular
FP = Forward perpendicular
MIDSHIPS = half way between AP and FP
X = 0 at midships (LBP/2)
Y = 0 at ship centerline
Z = 0 at ship keel (baseline)

3-6 **VESSEL DESIGN CONSIDERATIONS.** Some important vessel mooring design considerations are summarized in Table 3-11. General information on ships can be found in the Ships Characteristics Database (WATERS TOOLBOX) and in the NAVSEA *Hitchhikers Guide to Navy Surface Ships*.

Table 3-11. Design Considerations - Ship

PARAMETER	NOTES
Ship fittings	The type, capacity, location, and number of mooring fittings on the ship are critical in designing moorings.
Ship hardware	The type, capacity, location, and number of other mooring hardware (chain, anchors, winches, etc.) on the ship are critical.
Buoyancy	The ship's buoyancy supports the ship up in the heave, pitch, and roll directions. Therefore, it is usually undesirable to have much mooring capacity in these directions. A large ship, for example, may have over a million pounds of buoyancy for a foot of water level rise. If an unusually large water level rise occurs for a mooring with a large component of the mooring force in the vertical direction, this could result in mooring failure.
Hull pressures	Ships are designed so that only a certain allowable pressure can be safely resisted. Allowable hull pressures and fender design are discussed in NFESC TR-6015-OCN, *Foam-Filled Fender Design to Prevent Hull Damage*.
Personnel access	Personnel access must be provided.
Cargo Loading	Ramps/sideport locations
Hotel services	Provision must be made for utilities and other hotel services.
Ship condition	Ships are typically in the "Light", "One-Third Stores" or "Fully-Loaded" condition or displacement.

3-7 **FACILITY DESIGN CONSIDERATIONS.** Some important facility mooring design considerations are summarized in Table 3-12.

Table 3-12. Design Considerations - Facility

PARAMETER	NOTES
Access	Adequate ship access in terms of channels, turning basins, bridge clearance, etc. needs to be provided. Also, tugs and pilots must be available.
Mooring fittings	The number, type, location and capacity of mooring fittings or attachment point have to meet the needs of all vessels using the facility.
Fenders	The number, type, location, and properties of marine fenders must be specified to protect the ship(s) and facility.
Water depth	The water depth at the mooring site must be adequate to meet the customer's needs.
Shoaling	Many harbor sites experience shoaling. The shoaling and possible need for dredging needs to be considered.
Permits	Permits (Federal, state, environmental, historical, etc.) are often required for facilities and they need to be considered.

3-8 ENVIRONMENTAL FORCING DESIGN CONSIDERATIONS.

Environmental forces acting on a moored ship(s) can be complex. Winds, currents, water levels, and waves are especially important for many designs. Specific environmental design criteria for selected sites of interest can be found in the Climatalogical Database (WATERS TOOLBOX)

3-8.1 **Winds.** A change in pressure from one point on the earth to another causes the wind to blow. Turbulence is carried along with the overall wind flow to produce wind gusts. If the mean wind speed and direction do not change very rapidly with time, the winds are referred to as “stationary.”

Practical experience has shown that wind gusts with a duration of approximately 30 seconds or longer have a significant influence on typical moored ships with displacements of about 1000 tons or larger. Vessels with shorter natural periods can respond to shorter duration gusts. For the purposes of this UFC, a 30-second wind duration at a 10-meter (33-foot) elevation is recommended for the design for “stationary” winds. The relationship of the 30-second wind to other wind durations is shown in Figure 3-5.

If wind speed and/or direction changes rapidly, such as in a wind gust front, hurricane or tornado, then winds are “non-stationary”. Figure 3-6, for example, shows a recording from typhoon OMAR in 1992 at Guam. The eye of this storm went over the recording site. The upper portion of this figure shows the wind speed and the lower portion of the figure is the wind direction. Time on the chart recorder proceeds from right to left. This hurricane had rapid changes in wind speed and direction. As the eye passes there is also a large-scale change in wind speed and direction.

Figure 3-5. Ratio of Wind Speeds for Various Gusts (after ASCE 7-95)

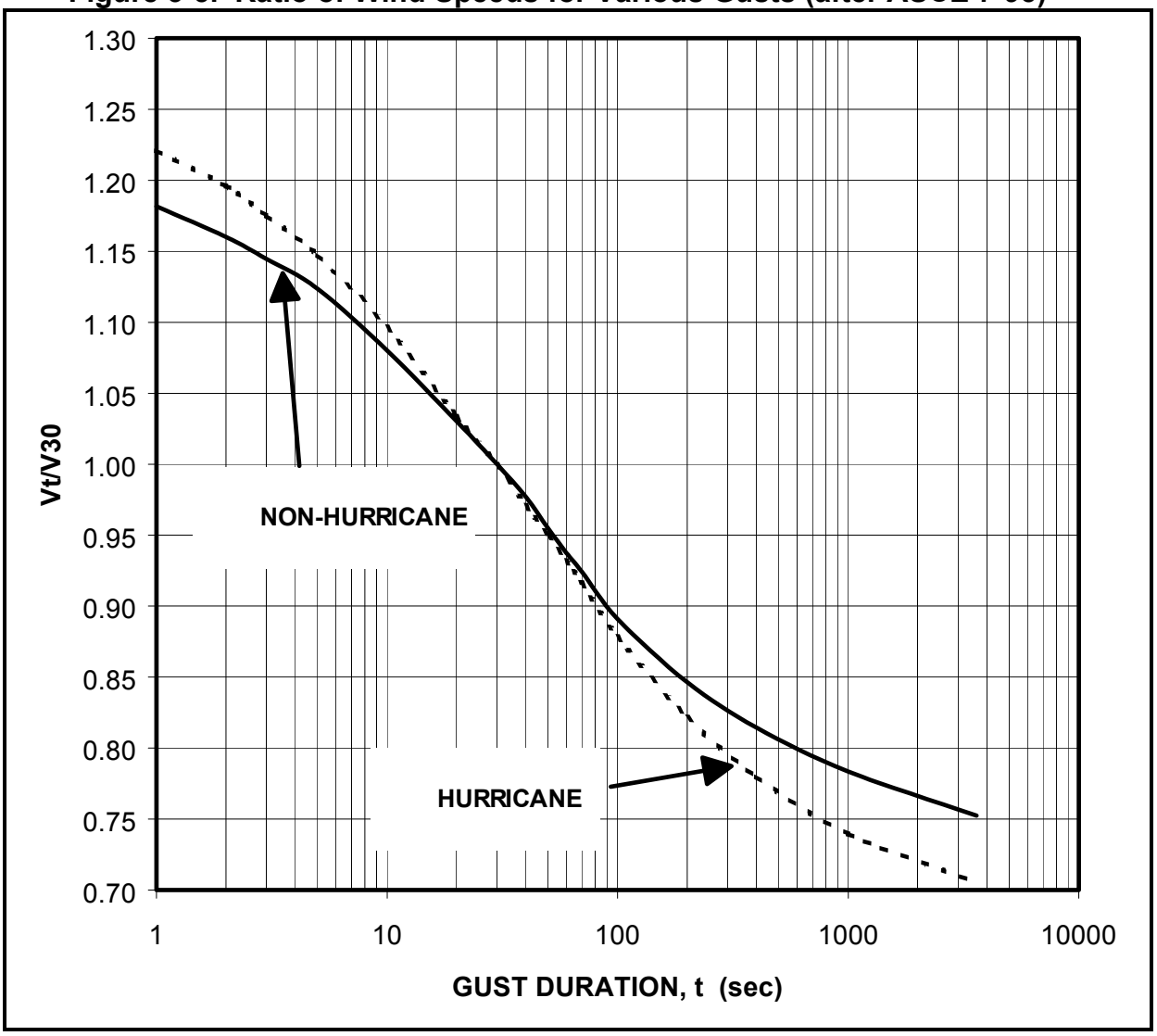

t (sec)	Vt/V30 Non-Hurricane	Vt/V30 Hurricane
1	1.182	1.221
2	1.160	1.196
3	1.145	1.175
5	1.124	1.147
10	1.080	1.097
20	1.030	1.034
30	1.000	1.000
40	0.977	0.971
50	0.955	0.950
60	0.938	0.932
70	0.924	0.917
100	0.891	0.879
200	0.846	0.822
400	0.815	0.780
1000	0.783	0.739
3600	0.753	0.706

Figure 3-6. Typhoon *OMAR* Wind Chart Recording

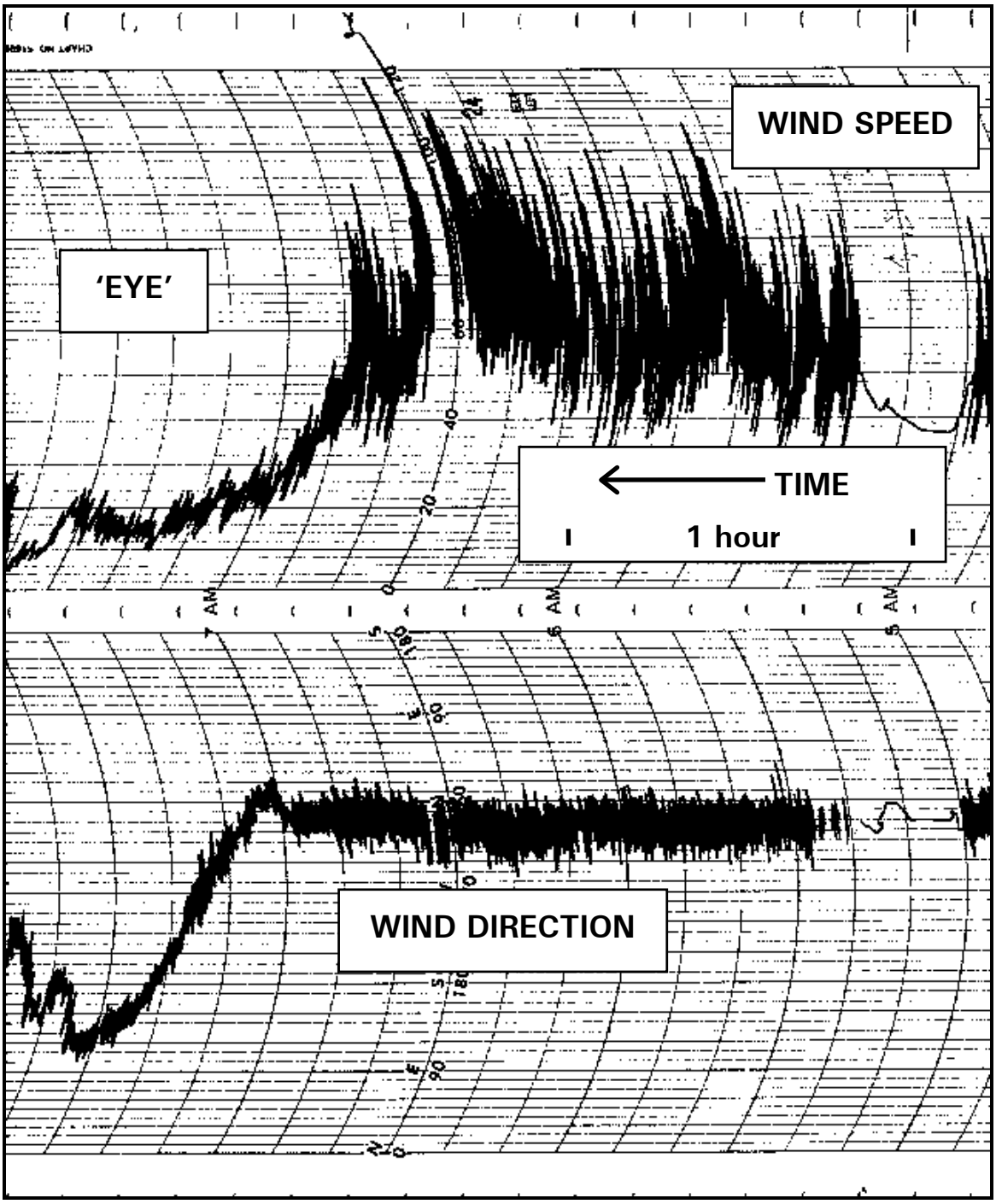

3-8.2 **Wind Gust Fronts.** A particularly dangerous wind condition that has caused a number of mooring accidents is the wind gust front *(Mooring Dynamics Due to Wind Gust Fronts*, Seelig and Headland, 1998 and CHESNAVFACENGCOM, FPO-1-87(1), *Failure Analysis of Hawsers on BOBO Class MSC Ships at Tinian on 7 December 1986*). This is a sudden change in wind speed that is usually associated with a change in wind direction (*Wind Effects on Structures*, Simiu and Scanlan, 1996). The key problems with this phenomena are: (1) high mooring dynamic loads can be produced in a wind gust front, (2) there is often little warning, (3) little is known about wind gust fronts, and (4) no design criteria for these events have been established.

A study of Guam Agana National Air Station (NAS) wind records was performed to obtain some statistics of wind gust fronts (National Climatic Data Center (NCDC), Letter Report E/CC31:MJC, 1987). The 4.5 years of records analyzed from 1982 through 1986 showed approximately 500 cases of sudden wind speed change, which were associated with a shift in wind direction. These wind shifts predominately occurred in 1 minute or less and never took longer than 2 minutes to reach maximum wind speed. Figure 3-7 shows sudden changes in wind speed and direction that occurred over a 2-1/2 day period in October 1982. These wind gust fronts seemed to be associated with a nearby typhoon.

Table 3-13 gives the joint distribution of wind shifts in terms of the amount the increase in wind speed and the wind direction change. Approximately 60 percent of the wind gust fronts from 1982 through 1986 had wind direction changes in the 30-degree range, as shown in Figure 3-8.

Based on the Guam observations, the initial wind speed in a wind gust front ranges from 0 to 75 percent of the maximum wind speed, as shown in Figure 3-9. On the average, the initial wind speed was 48 percent of the maximum in the 4.5-year sample from Guam (NCDC, 1987).

Simiu and Scanlan (1996) report wind gust front increases in wind speed ranging from 3 m/sec to 30 m/sec (i.e., 6 to 60 knots). Figure 3-10 shows the distribution of gust front winds from the 4.5-year sample from 1982 through 1986 on Guam. This figure shows the probability of exceedence on the x-axis in a logarithmic format. The square of the wind gust front speed maximums was plotted on the y-axis, since wind force is proportional to wind speed squared. Figure 3-10 provides a sample of the maximum wind gust front distribution for a relatively short period at one site. Those wind gust fronts that occurred when a typhoon was nearby are identified with an "H." It can be seen that the majority of the higher gust front maximums were associated with typhoons. Also, the typhoon gust front wind speed maxima seem to follow a different distribution that the gust front maxima associated with rain and thunderstorms (see Figure 3-10).

Effects of winds and wind gusts are shown in the examples in Chapter 8 of this UFC.

Figure 3-7. Sample Wind Gust Fronts on Guam, 2-4 October 1982

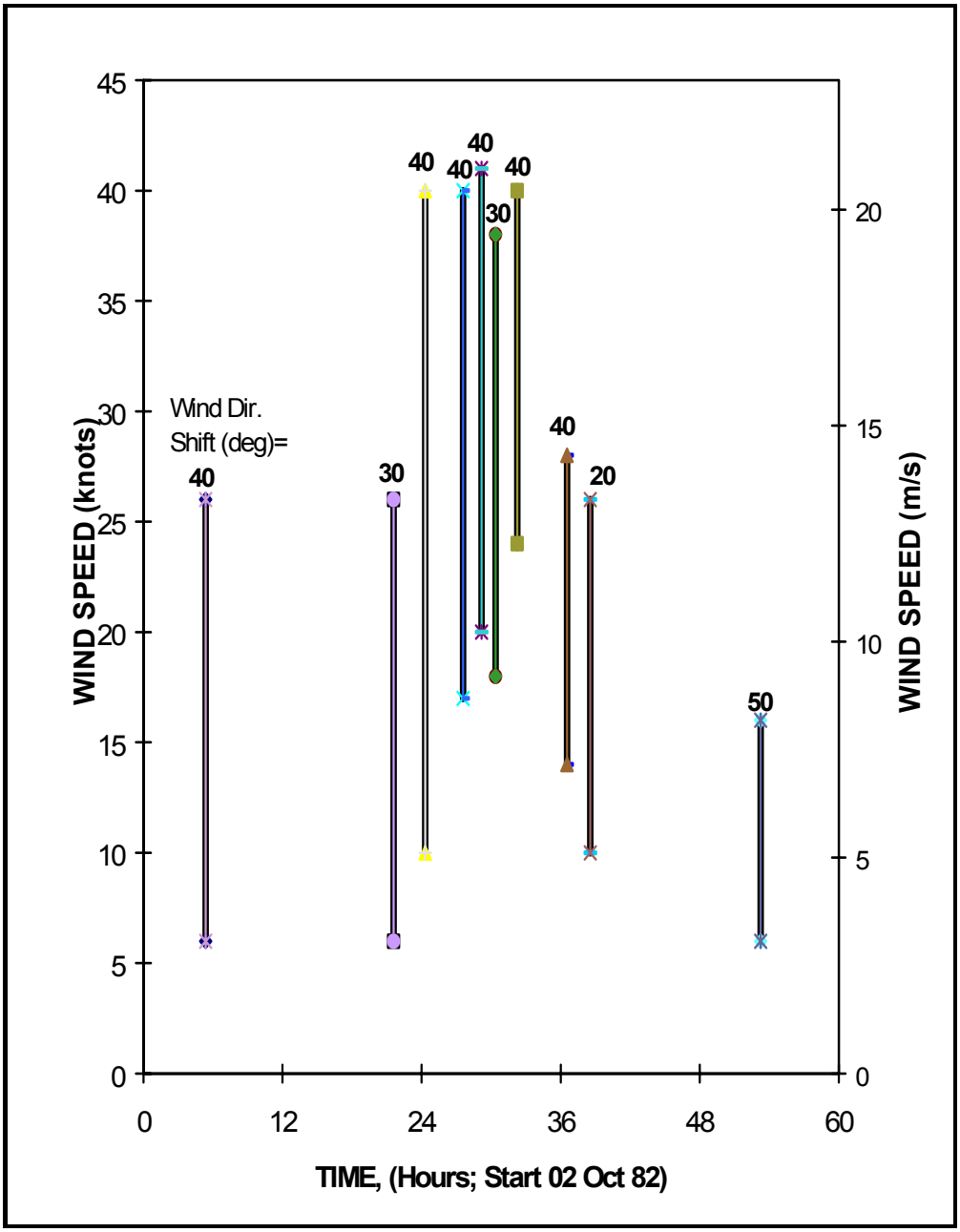

Table 3-13. Sample Distribution of Wind Gust Fronts on Guam (Agana NAS) from 1982 to 1986

WIND SPEED CHANGE (knots)		WIND SPEED CHANGE (m/s)		NUMBER OF OBSERVATIONS WIND DIRECTION CHANGE							
MIN.	MAX.	MIN.	MAX.	20 deg	30 deg	40 deg	50 deg	60 deg	70 deg	80 deg	90 deg
6	10	3.1	5.1	28	241	66	30	4		2	
11	15	5.7	7.7	8	42	18	13	5	3	1	1
16	20	8.2	10.3	6	7	3	2	2			
21	25	10.8	12.9		3	2		1			
26	30	13.4	15.4			1					

Figure 3-8. Distribution of Guam Wind Gust Front Wind Angle Changes

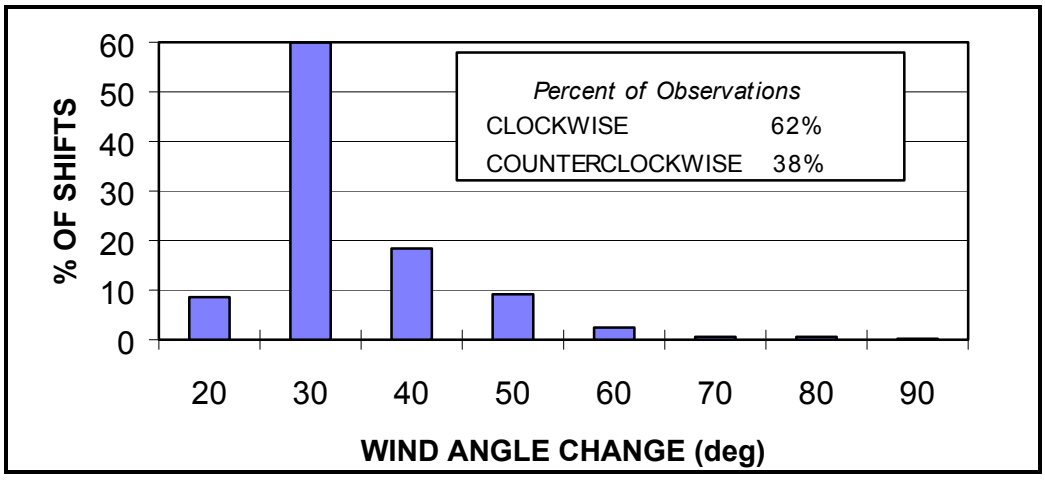

Figure 3-9. Initial Versus Maximum Wind Speeds for Wind Gust Fronts

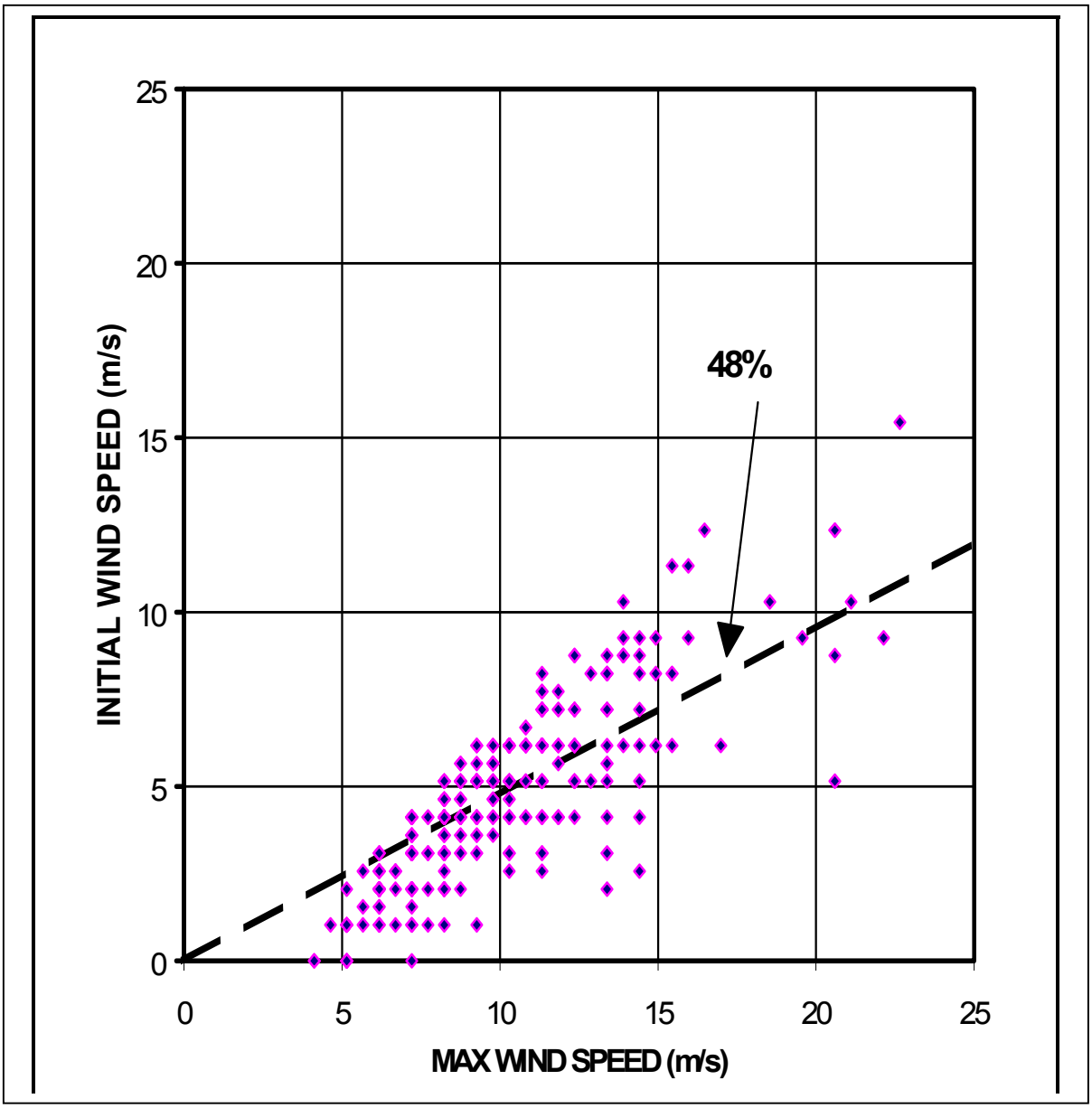

Figure 3-10. Wind Gust Front Maxima on Guam 1982-1986

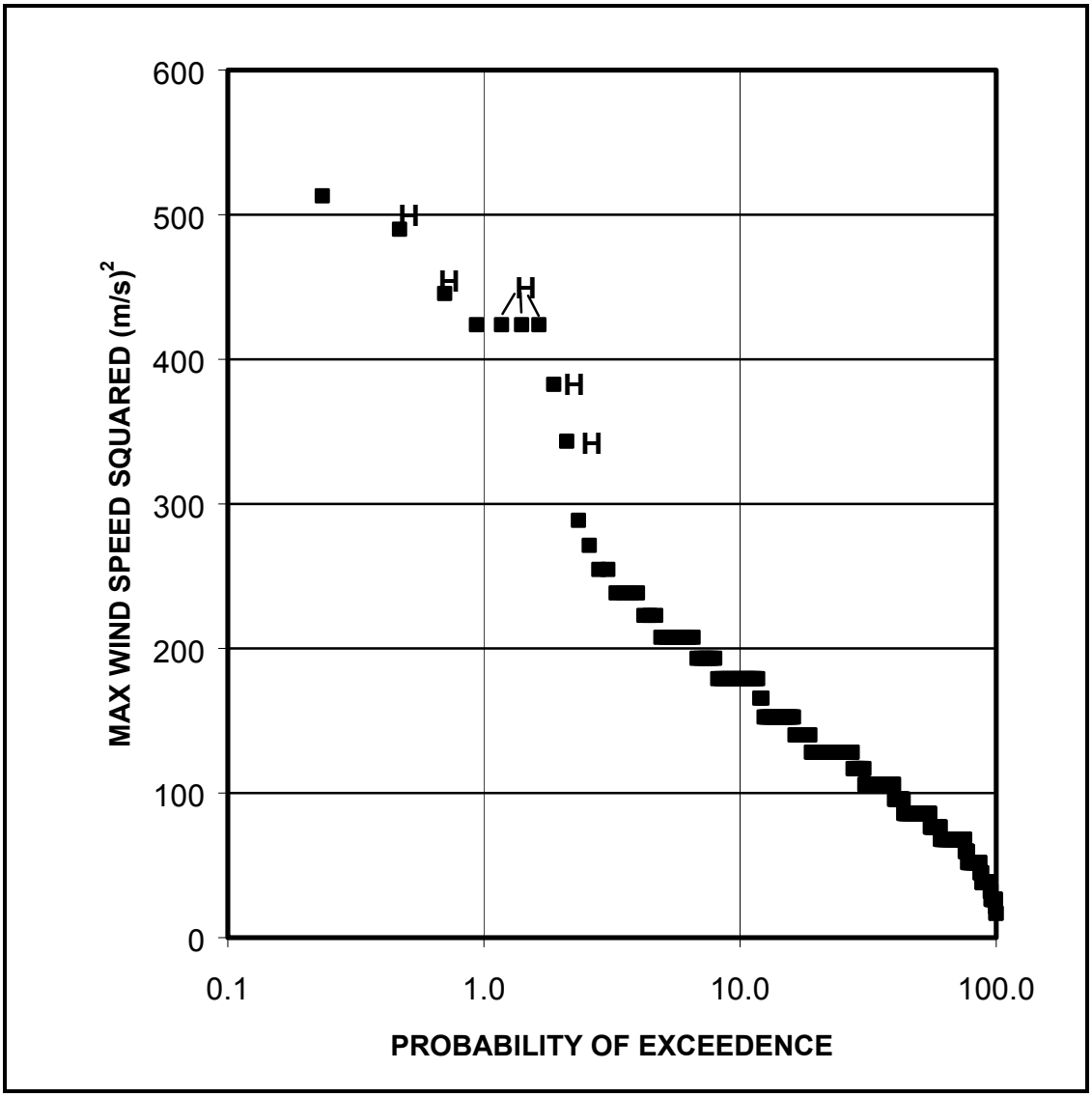

3-8.3 **Storms.** Table 3-14 gives environmental parameters for standard storms.

Table 3-14. Storm Parameters

(a) Tropical Storms

	LOWER WIND SPEED			UPPER WIND SPEED		
Storm	(m/s)	(mph)	(knts)	(m/s)	(mph)	(knts)
TROPICAL DEPRESSION	9.8	22	19	16.5	37	32
TROPICAL STORM	17.0	38	33	32.6	73	63
HURRICANE	33.1	74	64	-	-	-

(b) Saffier-Simpson Hurricane Scale

	WIND SPEED RANGE				OPEN COAST STORM SURGE RANGE			
	LOWER		UPPER		LOWER		UPPER	
CATE-GORY	(m/s)	(mph)	(m/s)	(mph)	(m)	(ft)	(m)	(ft)
1	33.1	74	42.5	95	1.22	4	1.52	5
2	42.9	96	49.2	110	1.83	6	2.44	8
3	49.6	111	58.1	130	2.74	9	3.66	12
4	58.6	131	69.3	155	3.96	13	5.49	18
5	69.7	156	-	-	5.79	19	-	-

Table 3-14. (continued) Storm Parameters

(c) Beaufort Wind Force*

		LOWER WIND SPEED			UPPER WIND SPEED		
	BEAUFORT WIND FORCE/ DESCRIPTION	(m/s)	(mph)	(knts)	(m/s)	(mph)	(knts)
0	CALM	0.0	0	0	0.5	1	1
1	LIGHT AIRS	0.5	1	1	1.5	4	3
2	LIGHT BREEZE	2.1	5	4	3.1	7	6
3	GENTLE GREEZE	3.6	8	7	5.1	12	10
4	MODERATE BREEZE	5.7	13	11	8.2	18	16
5	FRESH BREEZE	8.8	20	17	10.8	24	21
6	STRONG BREEZE	11.3	25	22	13.9	31	27
7	MODERATE GALE	14.4	32	28	17.0	38	33
8	FRESH GALE	17.5	39	34	20.6	46	40
9	STRONG GALE	21.1	47	41	24.2	54	47
10	WHOLE GALE	24.7	55	48	28.3	63	55
11	STORM	28.8	65	56	32.4	73	63
12	HURRICANE	32.9	74	64	36.6	82	71

*After *Handbook of Ocean and Underwater Engineers*, Myers et al. (1969). The above table should be used with caution, because design conditions for a specific site could vary from the values shown.

Table 3-14. (continued) Storm Parameters

(d) World Meteorological Organization Sea State Scale

SEA STATE		Sign. Wave Height (ft) [m]	Sustained Wind Speed (knts) [m/s]	Modal Wave Period Range (sec)
0	CALM/GLASSY	NONE	NONE	-
1	RIPPLED	0-0.3 [0-0.1]	0-6 [0-3]	-
2	SMOOTH	0.3-1.6 [0.1-0.5]	7-10 [3.6-5.1]	3-15
3	SLIGHT	1.6-4.1 [0.5-1.2]	11-16 [5.7-8.2]	3-15.5
4	MODERATE	4.1-8.2 [1.2-2.5]	17-21 [8.7-10.8]	6-16
5	ROUGH	8.2-13.1 [2.5-4.0]	22-27 [11.3-13.9]	7-16.5
6	VERY ROUGH	13.1-19.7 [4.0-6.0]	28-47 [14.4-24.2]	9-17
7	HIGH	19.7-29.5 [6.0-9.0]	48-55 [24.7-28.3]	10-18
8	VERY HIGH	29.5-45.5[9.0-13.9]	56-63 [28.8-32.4]	13-19
9	PHENOMENAL	>45.5 [>13.9]	>63 [>32.4]	18-24

3-8.4 **Currents.** The magnitude and direction of currents in harbors and nearshore areas are in most cases a function of location and time. Astronomical tides, river discharges, wind-driven currents, and other factors can influence currents. For example, wind-driven currents are surface currents that result from the stress exerted by the wind on the sea surface. Wind-driven currents generally attain a mean velocity of approximately 3 to 5 percent of the mean wind speed at 10 meters (33 feet) above the sea surface. The magnitude of this current strongly decreases with depth.

Currents can be very site specific, so it is recommended that currents be measured at the design site and combined with other information available to define the design current conditions.

3-8.5 **Water Levels.** At most sites some standard datum, such as mean low water (MLW) or mean lower low water (MLLW), is established by formal methods. Water levels are then referenced to this datum. The water level in most harbors is then a function of time. Factors influencing water levels include astronomical tides, storm surges, river discharges, winds, seiches, and other factors.

The design range in water levels at the site must be considered in the design process.

3-8.6 **Waves.** Most DOD moorings are wisely located in harbors to help minimize wave effects. However, waves can be important to mooring designs in some cases. The two primary wave categories of interest are:

a) Wind waves. Wind waves can be locally generated or can be wind waves or swell entering the harbor entrance(s). Small vessels are especially susceptible to wind waves.

b) Long waves. These can be due to surf beat, harbor seiching, or other effects.

Ship waves may be important in some cases. The response of a moored vessel to wave forcing includes:

a) A steady mean force.

b) First order response, where the vessel responds to each wave, and

c) Second order response, where some natural long period mode of ship/mooring motion, which usually has little damping, is forced by the group or other nature of the waves.

If any of these effects are important to a given mooring design, then a six-degree-of-freedom dynamic of the system generally needs to be considered in design. Some guidance on safe wave limits for moored manned small craft is given in Table 3-8(a).

3-8.7 **Water Depths.** The bathymetry of a site may be complex, depending on the geology and history of dredging. Water depth may also be a function of time, if there is shoaling or scouring. Water depths are highly site specific, so hydrographic surveys of the project site are recommended.

3-8.8 **Environmental Design Information.** Some sources of environmental design information of interest to mooring designers are summarized in Table 3-15.

Table 3-15. Some Sources of Environmental Design Information

a. Winds

Climatalogical Database (WATERS TOOLBOX)
UFC 1-200-01 *Design: General Building Requirements*
National Bureau of Standards (NBS), Series 124, *Hurricane Wind Speeds in the United States,* 1980
Nuclear Regulatory Commission (NUREG), NUREG/CR-2639, *Historical Extreme Winds for the United States – Atlantic and Gulf of Mexico Coastlines*, 1982
Hurricane and Typhoon Havens Handbooks, NRL (1996) and NEPRF (1982)
NUREG/CR-4801, *Climatology of Extreme Winds in Southern California*, 1987
NBS Series 118, *Extreme Wind Speeds at 129 Stations in the Contiguous* United States, 1979
U.S. Navy Marine Climatic Atlas of the World, Ver 1.0

b. Currents

Climatalogical Database (WATERS TOOLBOX)
National Ocean Survey records
Nautical Software, Tides and Currents for Windows, 1995
U.S. Army Corps of Engineers records

Table 3-15. (continued) Some Sources of Environmental Design Information

c. Water Levels

Climatalogical Database (WATERS TOOLBOX)
Federal Emergency Management Agency records
U.S. Army Corps of Engineers, Special Report No. 7, *Tides and Tidal Datums in the United States*, 1981
National Ocean Survey records
Hurricane and Typhoon Havens Handbooks, NRL (1996) and NEPRF (1982)
Nautical Software (1995)
U.S. Army Corps of Engineers records

d. Waves

Hurricane and Typhoon Havens Handbooks, NRL (1996) and NEPRF (1982)
U.S. Army Corps of Engineers, *Coastal Engineering Manual* (current version) gives prediction methods

e. Bathymetry

From other projects in the area
National Ocean Survey charts and surveys
U.S. Army Corps of Engineers dredging records

3-9 **OPERATIONAL CONSIDERATIONS.** Some important operational design considerations are summarized in Table 3-16.

Table 3-16. Mooring Operational Design Considerations

PARAMETER	NOTES
Personnel experience/ training	What is the skill of the people using the mooring?
Failure	What are the consequences of failure? Are there any design features that can be incorporated that can reduce the impact?
Ease of use	How easy is the mooring to use and are there factors that can make it easier to use?
Safety	Can features be incorporated to make the mooring safer for the ship and personnel?
Act-of-God events	Extreme events can occur unexpectedly. Can features be incorporated to accommodate them?
Future use	Future customer requirements may vary from present needs. Are there things that can be done to make a mooring facility more universal?

3-10 **INSPECTION.** Mooring systems and components should be inspected periodically to ensure they are in good working order and are safe. Table 3-17 gives inspection guidelines.

Table 3-17. Inspection Guidelines

MOORING SYSTEM OR COMPONENT	MAXIMUM INSPECTION INTERVAL	NOTES
Piers and wharves	1 year 3 years 6 years	Surface inspection Complete inspection - wood structures Complete inspection - concrete and steel structures See NAVFAC MO-104.2, *Specialized Underwater Waterfront Facilities Inspections*; If the actual capacity/condition of mooring fittings on a pier/wharf is unknown, then pull tests are recommended to proof the fittings.
Fleet Moorings	3 years	See CHESNAVFACENGCOM, FPO-1-84(6), *Fleet Mooring Underwater Inspection Guidelines*. Also inspect and replace anodes, if required. More frequent inspection may be required for moorings at exposed sites or for critical facilities.
Synthetic line	6 months	Per manufacturer's recommendations

Table 3-17. (Continued) Inspection Guidelines

MOORING SYSTEM OR COMPONENT	MAXIMUM INSPECTION INTERVAL	NOTES
Ship's chain	36 months 24 months 18 months	0-3 years of service 4-10 years of service >10 years of service (American Petroleum Institute (API) RP 2T, *Recommended Practice for Planning, Designing, and Constructing Tension Leg Platforms*)
Wire rope	18 months 12 months 9 months	0-2 years of service 3-5 years of service >5 years of service (API RP 2T)

3-11 **MAINTENANCE.** If excessive wear or damage occurs to a mooring system, then it must be maintained. Fleet mooring chain, for example, is allowed to wear to a diameter of 90 percent of the original steel bar diameter. As measured diameters approach 90 percent, then maintenance is scheduled. Moorings with 80 to 90 percent of the original chain diameter are restricted to limited use. If a chain diameter reaches a bar diameter of 80 percent of the original diameter, then the mooring is condemned. Figure 3-11 illustrates some idealized models of chain wear

3-12 **GENERAL MOORING GUIDELINES.** Experience and practical considerations show that the recommendations given in Table 3-18 will help ensure safe mooring. These ideas apply to both ship mooring hardware and mooring facilities.

Figure 3-11. Idealized Models of Chain Wear

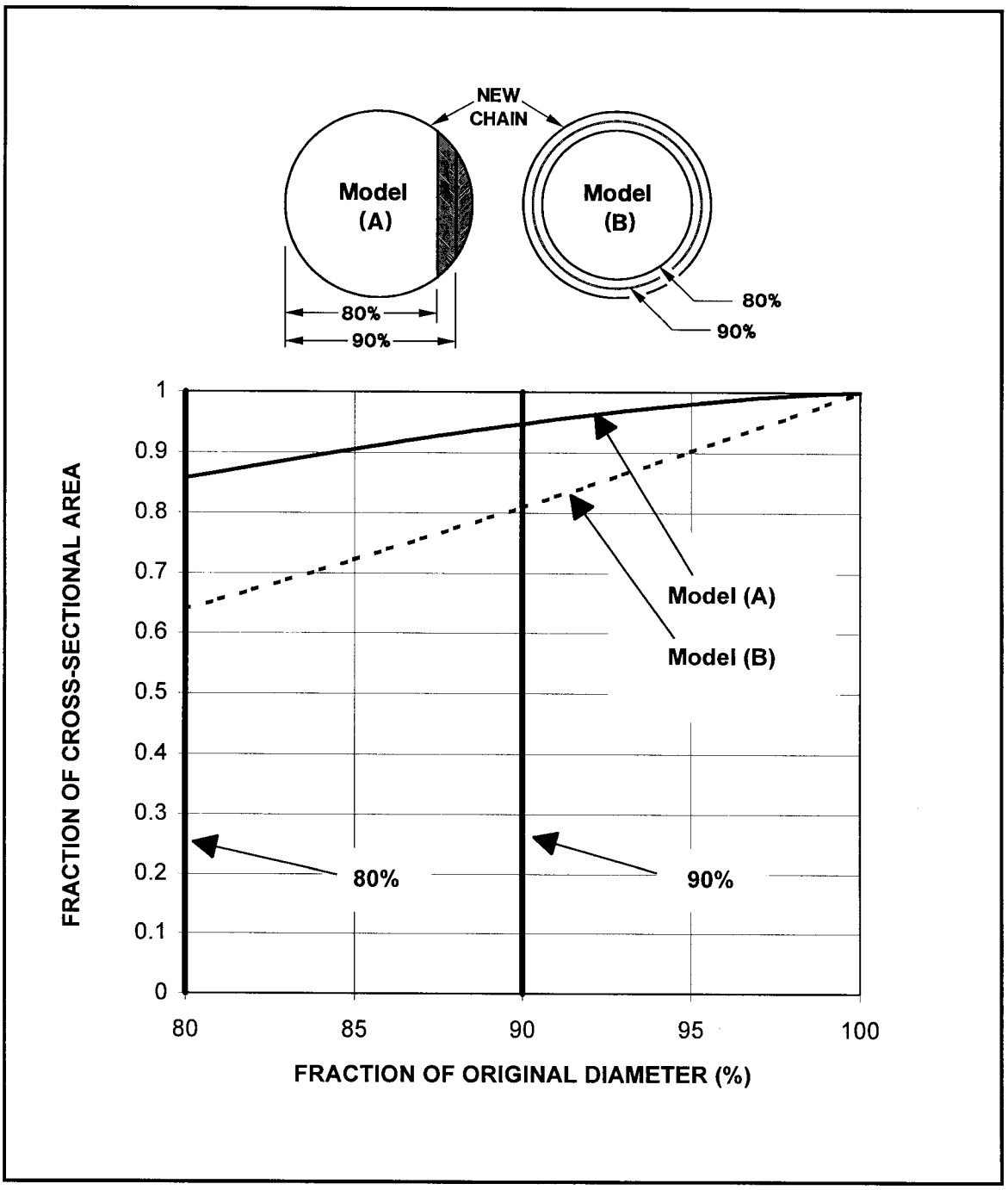

Table 3-18. Design Recommendations

IDEA	NOTES
Allow ship to move with rising and falling water levels	The weight and buoyancy forces of ships can be very high, so it is most practical to design moorings to allow ships to move in the vertical direction with changing water levels. The design range of water levels for a specific site should be determined in the design process.
Ensure mooring system components have similar strength	A system is only as strong as its weakest segment; a system with components of similar strength can be the most economical. Mooring lines should not have a break strength greater than the capacity of the fittings they use.
Ensure load sharing	In some moorings, such as at a pier, many lines are involved. Ensuring that members will share the load results in the most economical system.
Bridle design	In cases where a ship is moored to a single point mooring buoy with a bridle, ensure that each leg of the bridle can withstand the full mooring load, because one member may take the full load as the vessel swings.
Provide shock absorbing in mooring systems	Wind gusts, waves, passing ships, etc., will produce transient forces on a moored ship. Allowing some motion of the ship will reduce the dynamic loads. 'Shock absorbers' including marine fenders, timber piles, synthetic lines with stretch, chain catenaries, sinkers, and similar systems are recommended to allow a moored ship to move in a controlled manner.

Table 3-18. (continued) Design Recommendations

IDEA	NOTES
Limit the vertical angles of lines from ship to pier	Designing ships and piers to keep small vertical line angles has the advantages of improving line efficiency and reducing the possibility of lines pulling off pier fittings.
Select drag anchors to have a lower ultimate holding capacity than the breaking strength of chain and fittings	Design mooring system that uses drag anchor, so that the anchor will drag before the chain breaks.
Limit the loading on drag anchors to horizontal tension	Drag anchors work on the principle of 'plowing' into the soils. Keeping the mooring catenary angle small at the seafloor will aid in anchor holding. Have at least one shot of chain on the seafloor to help ensure the anchor will hold.
Pull test anchors whenever possible to the full design load	Pull testing anchors is recommended to ensure that all facilities with anchors provide the required holding capacity.

CHAPTER 4

STATIC ENVIRONMENTAL FORCES AND MOMENTS ON VESSELS

4-1 **SCOPE.** In this chapter design methods are presented for calculating static forces and moments on single and multiple moored vessels. Examples show calculation methods.

4-2 **ENGINEERING PROPERTIES OF WATER AND AIR.** The effects of water and air at the surface of the earth are of primary interest in this chapter. The engineering properties of both are given in Table 4-1.

Table 4-1. Engineering Properties of Air and Water

Standard Salt Water at Sea Level at 15°C (59°F)

PROPERTY	SI SYSTEM	ENGLISH SYSTEM
Mass density, ρ_w	1026 kg/m^3	1.9905 slug/ft^3
Weight density, γ_w	10060 newton/m^3	64.043 lbf/ft^3
Volume per long ton (LT)	0.9904 m^3/LT	34.977 ft^3/LT
Kinematic viscosity, ν	1.191E-6 m^2/sec	1.2817E-5 ft^2/sec

Standard Fresh Water at Sea Level at 15°C (59°F)

PROPERTY	SI SYSTEM	ENGLISH OR INCH-POUND SYSTEM
Mass density, ρ_w	999.0 kg/m^3	1.9384 slug/ft^3
Weight density, γ_w	9797 newton/m^3	62.366 lbf/ft^3
Volume per long ton (LT)	1.0171 m^3/LT	35.917 ft^3/LT
Volume per metric ton (ton or 1000 kg or 1 Mg)	1.001 m^3/ton	35.3497 ft^3/ton
Kinematic viscosity, ν	1.141E-6 m^2/sec	1.2285E-5 ft^2/sec

Table 4-1. (continued) Engineering Properties of Air and Water

Air at Sea Level at 20°C (68°F)*

PROPERTY	SI SYSTEM	ENGLISH OR INCH-POUND SYSTEM
Mass density, ρ_a	1.221 kg/m^3	0.00237 slug/ft^3
Weight density, γ_a	11.978 newton/m^3	0.07625 lbf/ft^3
Kinematic viscosity, ν	1.50E-5 m^2/sec	1.615E-4 ft^2/sec

* Note that humidity and even heavy rain has relatively little effect on the engineering properties of air (personal communication with the National Weather Service, 1996)

4-3 **PRINCIPAL COORDINATE DIRECTIONS.** There are three primary axes for a ship:

X - Direction parallel with the ships Longitudinal axis
Y - Direction perpendicular to a vertical plane through the ship's longitudinal axis
Z - Direction perpendicular to a plane formed by the "X" and "Y" axes

There are six principal coordinate directions for a ship:

Surge - In the "X"-direction
Sway - In the "Y"-direction
Heave - In the "Z"-direction
Roll - Angular about the "X"-axis
Pitch - Angular about the "Y"-axis
Yaw - Angular about the "Z"-axis

Of primary interest are: (1) forces in the surge and sway directions in the "X-Y" plane, and (2) moment in the yaw direction about the "Z"-axis. Ship motions occur about the center of gravity of the ship.

4-4 **STATIC WIND FORCES/MOMENTS.** Static wind forces and moments on stationary moored vessels are computed in this chapter. Figure 4-1 shows the definition of some of the terms used in this chapter. Figure 4-2 shows the local coordinate system.

4-4.1 **Static Transverse Wind Force.** The static transverse wind force is defined as that component of force perpendicular to the vessel centerline. In the local ship coordinate system, this is the force in the "Y" or sway direction. Transverse wind force is determined from the equation:

EQUATION: $$F_{yw} = 0.5\, \rho_a\, V_w^{\,2}\, A_y\, C_{yw}\, f_{yw}\{\theta_w\} \qquad (2)$$

where

F_{yw} = transverse wind force (newtons)
ρ_a = mass density of air (from Table 4-1)
V_w = wind speed (m/s)
A_y = longitudinal projected area of the ship (m^2)
C_{yw} = transverse wind force drag coefficient
$f_{yw}\{\theta_w\}$ = shape function for transverse force
θ_w = wind angle (degrees)

Figure 4-1. Definition of Terms

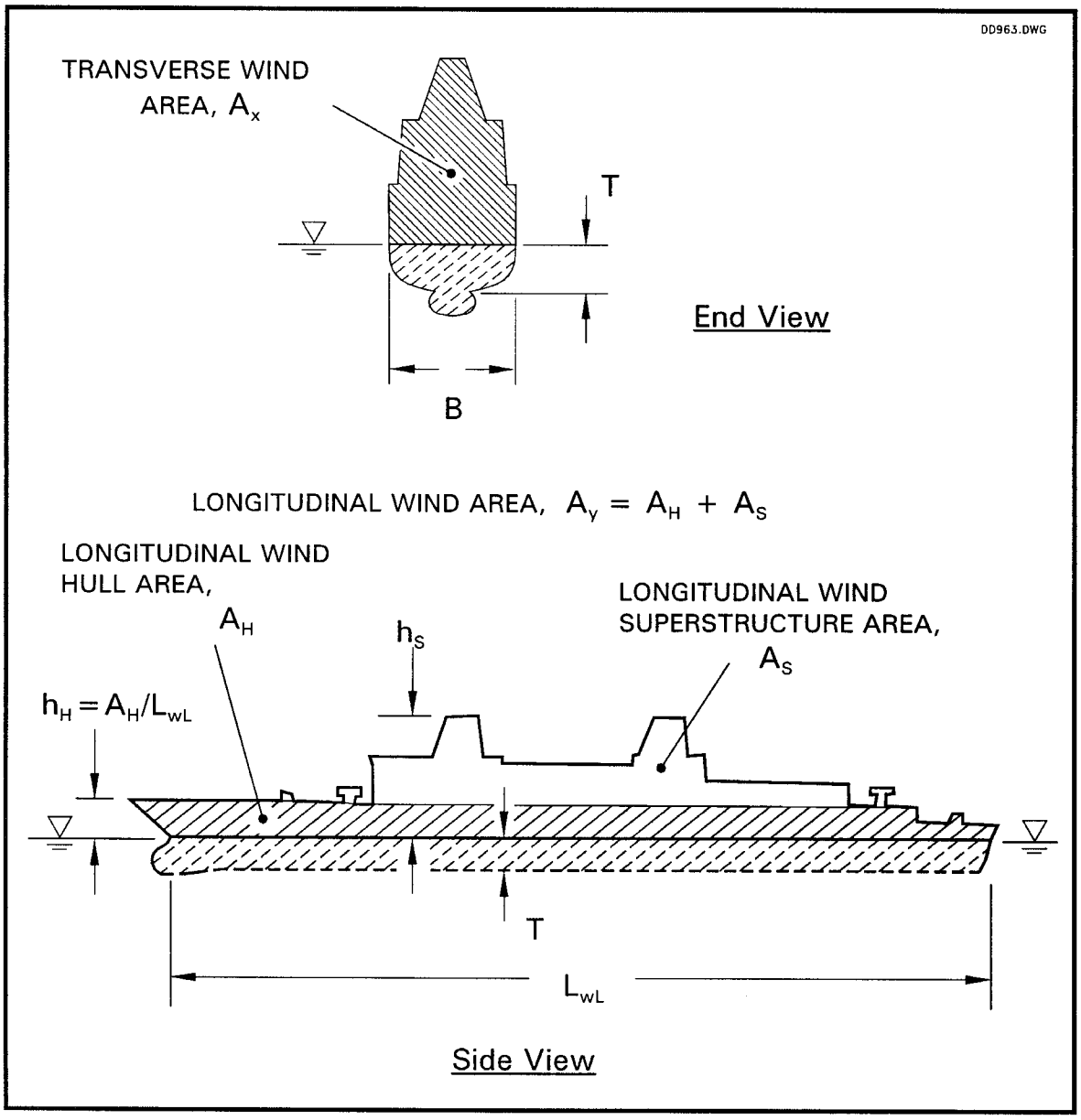

Figure 4-2. Local Coordinate System for a Ship

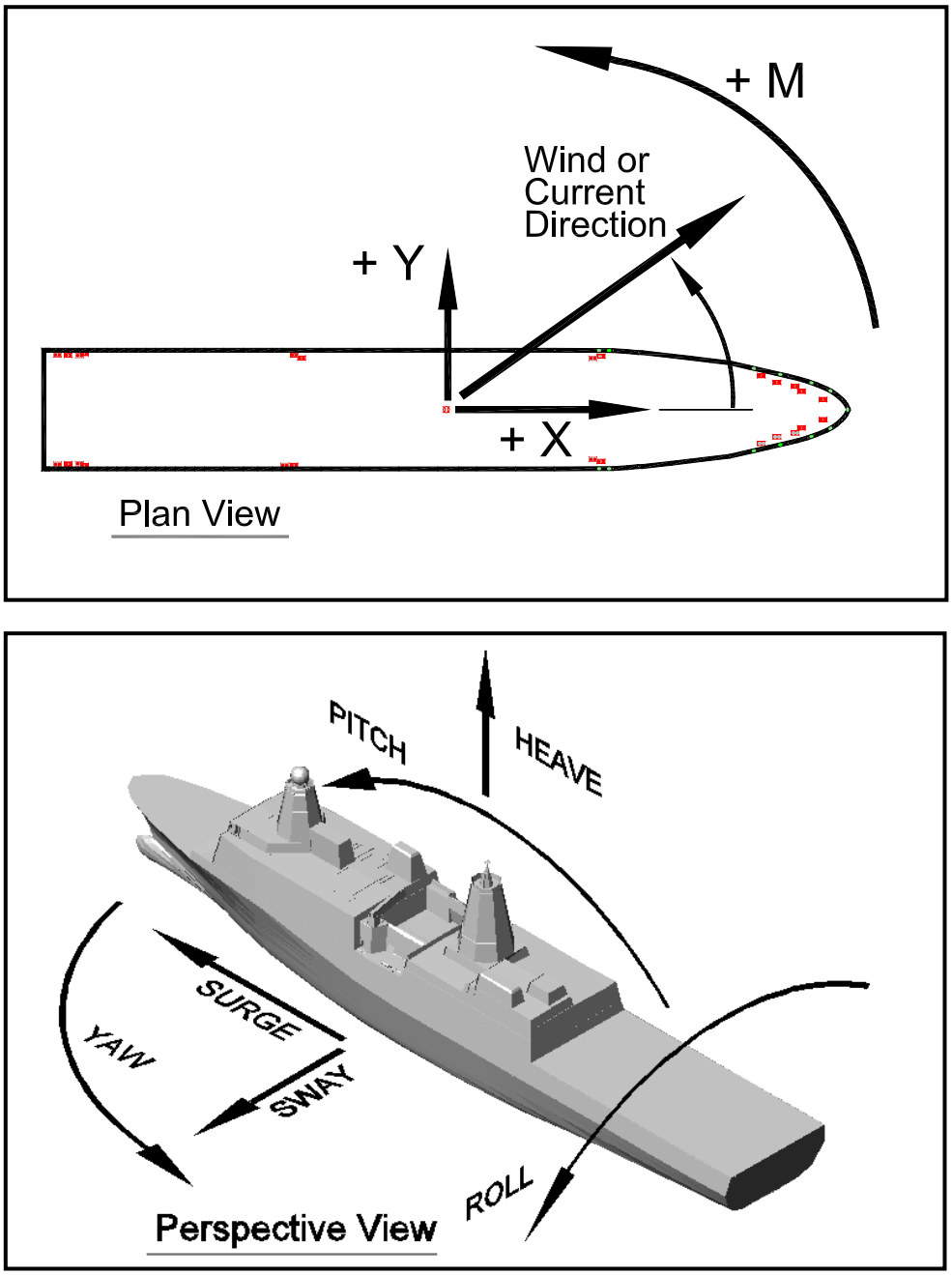

The transverse wind force drag coefficient depends upon the hull and superstructure of the vessel and is calculated using the following equation, adapted from Naval Civil Engineering Laboratory (NCEL), TN-1628, *Wind-Induced Steady Loads on Ships.*

EQUATION: $$C_{yw} = C * \left[((0.5(h_S + h_H)) / h_R)^{2/7} A_S + (0.5 * h_H / h_R)^{2/7} A_H \right] / A_Y \qquad (3)$$

where

C_{yw} =	transverse wind force drag coefficient
C =	empirical coefficient, see Table 4-2
h_R = 10 m	= reference height (32.8 ft)
h_H = A_H / L_{wL}	= average height of the hull, defined as the longitudinal wind hull area divided by the ship length at the waterline (m)
A_H =	longitudinal wind area of the hull (m^2)
L_{wL} =	ship length at the waterline (m)
h_S =	height of the superstructure above the waterline(m)
A_S =	longitudinal wind area of the superstructure (m^2)

A recommended value for the empirical coefficient is C = 0.92 +/-0.1 based on scale model wind tunnel tests (NCEL, TN-1628). Table 4-2 gives typical values of C for ships and Figure 4-3 illustrates some ship types.

Table 4-2. Sample Wind Coefficients for Ships

SHIP	C	NOTES
Hull dominated	0.82	Aircraft carriers, drydocks
Typical	0.92	ships with moderate superstructure
Extensive superstructure	1.02	Destroyers, cruisers

The shape function for the transverse wind force (NCEL, TN-1628) is given by:

EQUATION: $$f_{yw}\{\theta_w\} = +(\sin\theta_w - 0.05 * \sin\{5\theta_w\}) / 0.95 \quad (4)$$

where

$f_{yw}\{\theta_w\}$ = transverse wind coefficient shape function
θ_w = wind angle (degrees)

Equation 4 is positive for wind angles 0 < θw < 180 degrees and negative for wind angles 180 < θw < 360 degrees. Figure 4-4 shows the shape and typical values for Equation 4.

These two components were derived by integrating wind over the hull and superstructure areas to obtain effective wind speeds (NCEL, TN-1628). The following example illustrates calculations of the transverse wind force drag coefficient.

Figure 4-3. Sample Ship Profiles

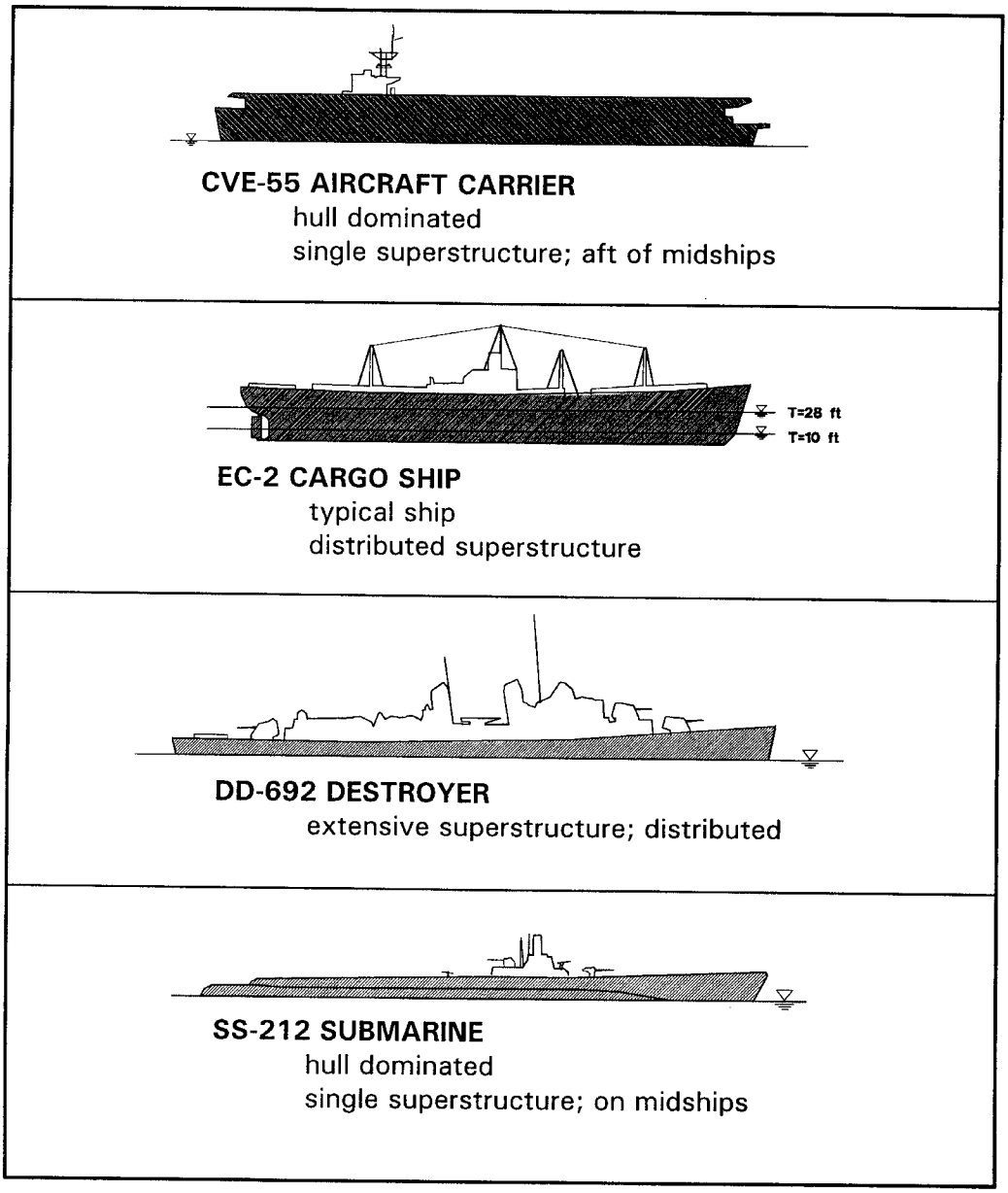

Figure 4-4. Shape Function for Transverse Wind Force

θ_w (deg)	$f_{wy}\{\theta_w\}$	θ_w (deg)	$f_{wy}\{\theta_w\}$
0	0.000	45	0.782
5	0.069	50	0.856
10	0.142	55	0.915
15	0.222	60	0.957
20	0.308	65	0.984
25	0.402	70	0.998
30	0.500	75	1.003
35	0.599	80	1.003
40	0.695	85	1.001
45	0.782	90	1.000

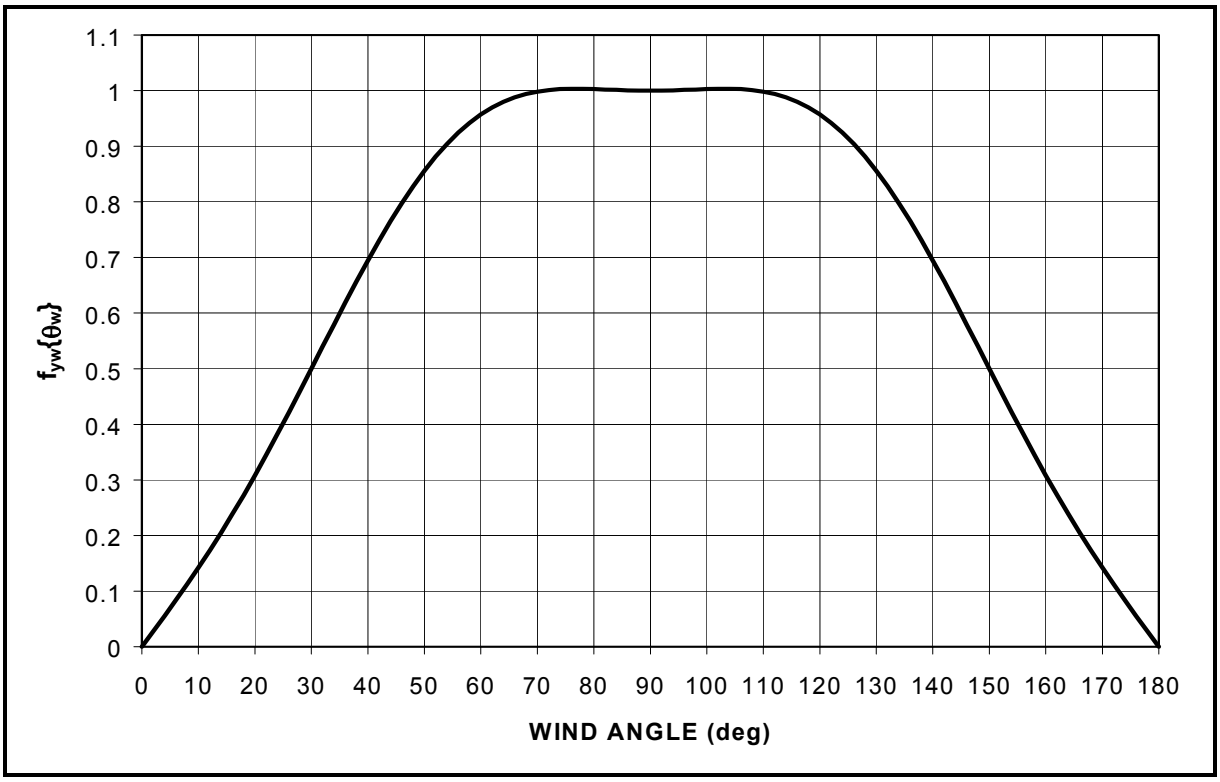

EXAMPLE: Find the transverse wind force drag coefficient on the destroyer shown in Figure 4-5.

SOLUTION: For this example the transverse wind force drag coefficient from Equation 3 is:

$$C_{yw} = C * \left[((0.5(23.9\text{m} + 6.43\text{m}))/10\text{m})^{2/7} 1203\text{m}^2 + (0.5 * 6.43\text{m}/10\text{m})^{2/7} 1036.1\text{m}^2\right] / 2239\text{m}^2$$

$$C_{yw} = 0.940 * C.$$

Destroyers have extensive superstructure, so a recommended value of C = 1.02 is used to give a transverse wind force drag coefficient of C_{yw} = 0.940*1.02 = 0.958.

Note that for cases where an impermeable structure, such as a wharf, is immediately next to the moored ship, the exposed longitudinal wind area and resulting transverse wind force can be reduced. Figure 4-6 shows an example of a ship next to a wharf. For Case (A), wind from the water, there is no blockage in the transverse wind force and elevations of the hull and superstructure are measured from the water surface. For Case (B), wind from land, the longitudinal wind area of the hull can be reduced by the blocked amount and elevations of hull and superstructure can be measured from the wharf elevation.

Cases of multiple ships are covered in par. 4.6.

Figure 4-5. Example

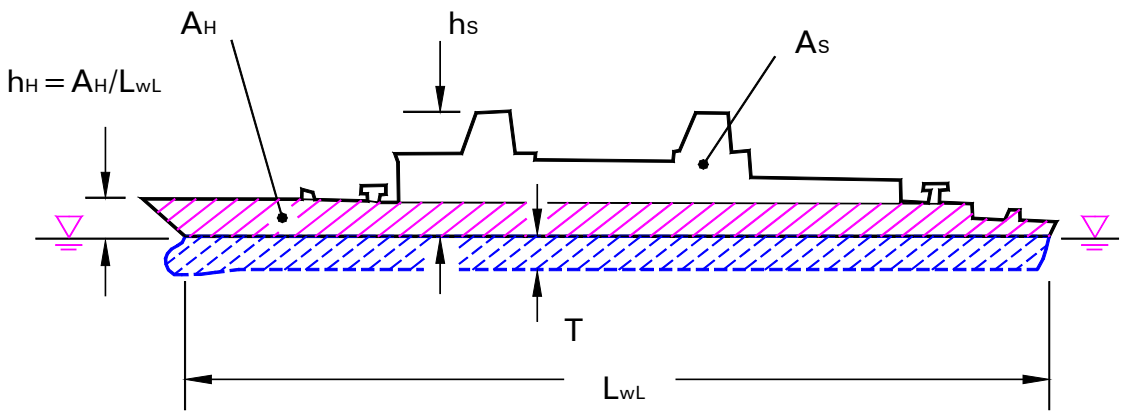

PARAMETER	VALUE (SI UNITS)	VALUE (ENGLISH)
L_{wL}	161.23 m	529 ft
A_Y	2239 m^2	24100 ft^2
A_H	1036 m^2	11152 ft^2
A_S	1203 m^2	12948 ft^2
$h_H = A_H/L_{wL}$	6.43 m	21.1 ft
h_S	23.9 m	78.4 ft

Figure 4-6. Blockage Effect for an Impermeable Structure Next to a Moored Ship

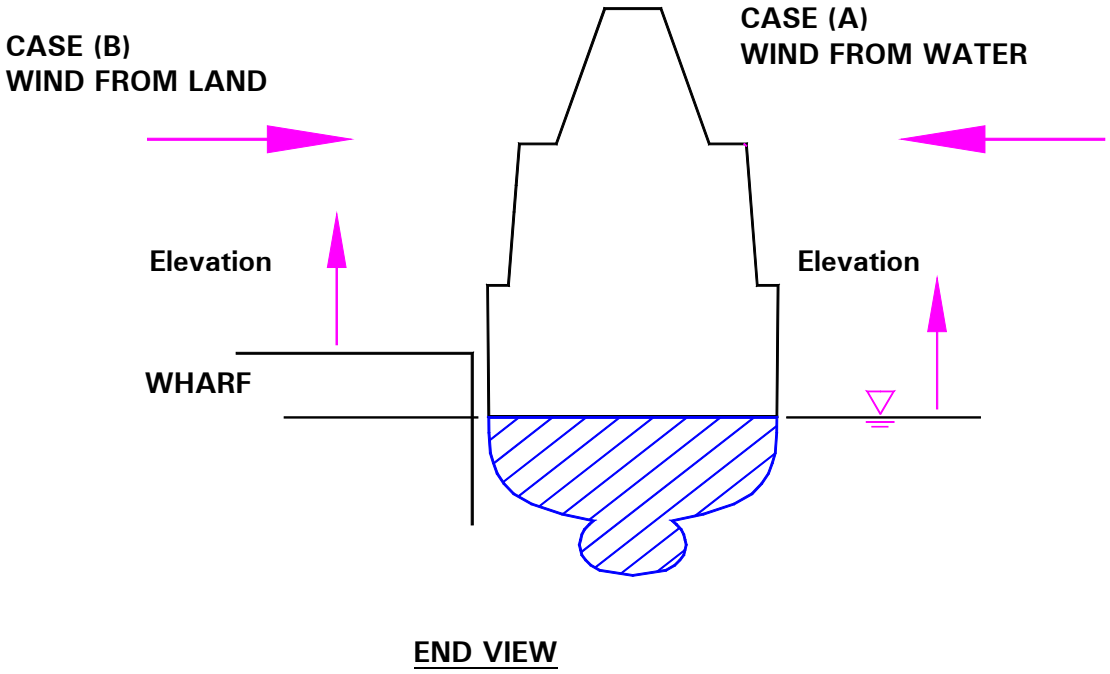

4-4.2 **Static Longitudinal Wind Force.** The static longitudinal wind force on a vessel is defined as that component of wind force parallel to the centerline of the vessel. This is the force in the "X" or surge direction in Figure 4-2. Figure 4-1 shows the definition of winds areas.

The longitudinal force is determined from NCEL, TN-1628 using the equation:

EQUATION: $$F_{xw} = 0.5\, \rho_a\, V_w^2 A_x\, C_{xw}\, f_{xw}(\theta_w) \qquad (5)$$

where

F_{xw} =	longitudinal wind force (newtons)
ρ_a =	mass density of air (from Table 4-1)
V_w =	wind speed (m/s)
A_x =	transverse wind area of the ship (m^2)
C_{xw} =	longitudinal wind force drag coefficient
$f_{xw}(\theta_w)$ =	shape function for longitudinal force
θ_w =	wind angle (degrees)

The longitudinal wind force drag coefficient, C_{xw}, depends on specific characteristics of the vessel. Additionally, the wind force drag coefficient varies depending on bow (C_{xwB}) or stern (C_{xwS}) wind loading. Types of vessels are given in three classes: hull dominated, normal, and excessive superstructure. Recommended values of longitudinal wind force drag coefficients are given in Table 4-3.

Table 4-3. Recommended Ship Longitudinal Wind Force Drag Coefficients

VESSEL TYPE	C_{xwB}	C_{xwS}
Hull Dominated (aircraft carriers, submarines, passenger liners)	0.40	0.40
Normal*	0.70	0.60
Center-Island Tankers*	0.80	0.60
Significant Superstructure (destroyers, cruisers)	0.70	0.80

*An adjustment of up to +0.10 to C_{xwB} and C_{xwS} should be made to account for significant cargo or cluttered decks.

The longitudinal shape function also varies over bow and stern wind loading regions. As the wind direction varies from headwind to tailwind, there is an angle at which the force changes sign. This is defined as θ_x and is dependent on the location of the superstructure relative to midships. Recommended values of this angle are given in Table 4-4.

Table 4-4. Recommended Values of θ_x

LOCATION OF SUPERSTRUCTURE	θ_x (deg)
Just forward of midships	100
On midships	90
Aft of midships (tankers)	80
Warships	70
Hull dominated	60

Shape functions are given for general vessel categories below:

CASE I SINGLE DISTINCT SUPERSTRUCTURE

The shape function for longitudinal wind load for ships with single, distinct superstructures and hull-dominated ships is given below (examples include aircraft carriers, EC-2, and cargo vessels):

EQUATION: $$f_{xw}(\theta_w) = \cos(\phi) \quad (6)$$

where $$\phi_- = \left(\frac{90°}{\theta_x}\right)\theta_w \text{ for } \theta_w < \theta_x \quad (6a)$$

$$\phi_+ = \left(\frac{90°}{180° - \theta_x}\right)(\theta_w - \theta_x) + 90° \text{ for } \theta_w > \theta_x \quad (6b)$$

θ_x = incident wind angle that produces no net longitudinal force (Table 4-4)

θ_w = wind angle

Values of $f_{xw}(\theta_w)$ are symmetrical about the longitudinal axis of the vessel. So when $\theta_w > 180°$, use $360° - \theta_w$ as θ_w in determining the shape function.

CASE II DISTRIBUTED SUPERSTRUCTURE

EQUATION: $$f_{xw}(\theta_w) = \frac{\left(\sin(\gamma) - \frac{\sin(5\gamma)}{10}\right)}{0.9} \quad (7)$$

where $$\gamma_- = \left(\frac{90°}{\theta_x}\right)\theta_w + 90° \text{ for } \theta_w < \theta_x \quad (7a)$$

$$\gamma_+ = \left(\frac{90°}{180° - \theta_x}\right)(\theta_W) + \left(180° - \left(\frac{90°\,\theta_x}{180° - \theta_x}\right)\right) \text{ for } \theta_w > \theta_x \quad (7b)$$

Values of $f_{xw}(\theta_w)$ are symmetrical about the longitudinal axis of the vessel. So when $\theta_w > 180°$, use $360° - \theta_w$ as θ_w in determining the shape function. Note that the maximum longitudinal wind force for these vessels occurs for wind directions slightly off the ship's longitudinal axis.

EXAMPLE: Find the longitudinal wind drag coefficient for a wind angle of 40 degrees for the destroyer shown in Figure 4-5.

SOLUTION: For this destroyer, the following values are selected:

θ_x = 70° from Table 4-4

C_{xwB} = 0.70 from Table 4-3

C_{xwS} = 0.80 from Table 4-3

This ship has a distributed superstructure and the wind angle is less than the crossing value, so Equation 7a is used to determine the shape function:

$$\gamma_ = \left(90° / (70°)\right)40° + 90° = 141.4°$$

$$f_{xw}(\theta_w) = \frac{\left(\sin\left(141.4°\right) - \frac{\sin(5 * 141.4°)}{10}\right)}{0.9} = 0.72$$

At the wind angle of 40 degrees, the wind has a longitudinal component on the stern. Therefore, the wind longitudinal drag coefficient for this example is:

$$C_{xw} f_{xw}(\theta_w) = 0.8 * 0.72 = 0.57$$

4-4.3 **Static Wind Yaw Moment.** The static wind yaw moment is defined as the product of the associated transverse wind force and its distance from the vessel's center of gravity. In the local ship coordinate system, this is the moment about the "Z" axis. Wind yaw moment is determined from the equation:

EQUATION: $$M_{xyw} = 0.5\,\rho_a\,V_w^{\,2}\,A_y\,LC_{xyw}\{\theta_w\} \qquad (8)$$

where

M_{xyw} = wind yaw moment (newton*m)
ρ_a = mass density of air (from Table 4-1)
V_w = wind speed (m/s)
A_y = longitudinal projected area of the ship (m^2)
L = length of ship (m)
$C_{xyw}\{\theta_w\}$ = normalized yaw moment coefficient
= moment arm divided by ship length
θ_w = wind angle (degrees)

The normalized yaw moment coefficient depends upon the vessel type. Equation 9 gives equations for computing the value of the yaw moment coefficient and Table 4-5 gives empirical parameter values for selected vessel types. The normalized yaw moment variables is found from:

EQUATION: $$C_{xyw}\{\theta_w\} = -a1 * \sin\left(\frac{\theta_w * 180}{\theta_z}\right) \qquad 0<\theta_w<\theta_z \qquad (9)$$

$$C_{xyw}\{\theta_w\} = a2 * \sin\left[(\theta_w - \theta_z) * \lambda)\right] \qquad \theta_z \le \theta_w < 180 \text{ deg} \qquad (9a)$$

and symmetrical about the longitudinal axis of the vessel,
where

$C_{xyw}\{\theta_w\}$ = normalized wind yaw moment coefficient
$a1$ = negative peak value (from Table 4-5)
$a2$ = positive peak value (from Table 4-5)
θ_w = wind angle (degrees)
θ_z = zero moment angle (degrees) (from Table 4-5)

$$\lambda = \frac{180 * \deg}{\left[(180 * \deg - \theta_z)\right]} \qquad \text{(dimensionless)} \qquad (9b)$$

Table 4-5. Normalized Wind Yaw Moment Variables

SHIP TYPE	Zero Moment Angle (θ_z)	Negative Peak (a1)	Positive Peak (a2)	NOTES
Liner	80	0.075	0.14	
Carrier	90	0.068	0.072	
Tanker	95	0.077	0.07	Center island w/ cluttered deck
Tanker	100	0.085	0.04	Center island w/ trim deck
Cruiser	90	0.064	0.05	
Destroyer	68	0.02	0.12	
Others:	130	0.13	0.025	stern superstructure
	102	0.096	0.029	aft midships superstructure
	90	0.1	0.1	midships superstructure
	75	0.03	0.05	forward midships superstructure
	105	0.18	0.12	bow superstructure

A plot of the yaw normalized moment coefficient for the example shown in Figure 4-5 is given as Figure 4-7.

Figure 4-7. Sample Yaw Normalized Moment Coefficient

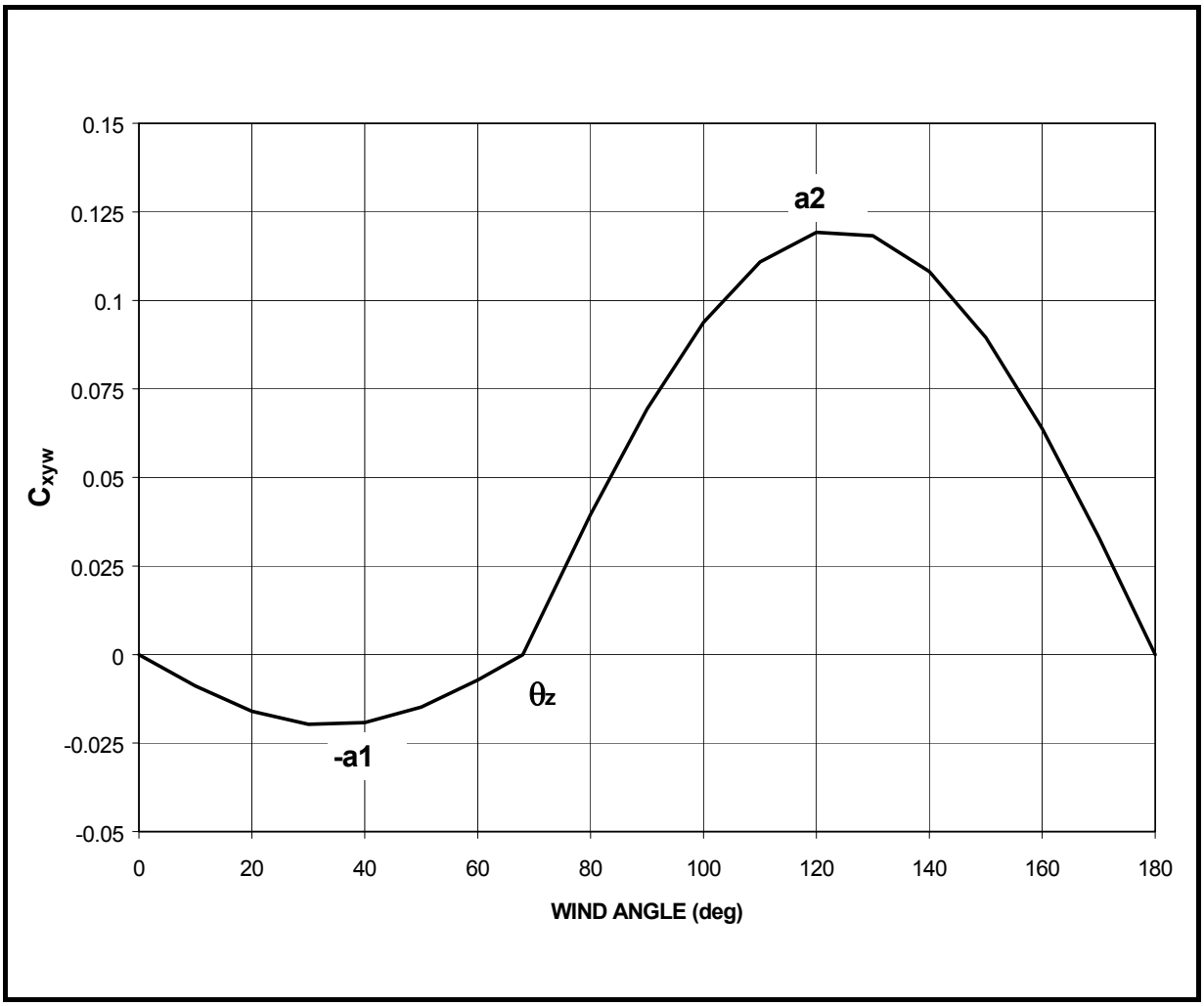

4-5 **STATIC CURRENT FORCES/MOMENTS.** Methods to determine static current forces and moments on stationary moored vessels in the surge and sway directions and yaw moment are presented in this section. These planar directions are of primary importance in many mooring designs.

4-5.1 **Static Transverse Current Force.** The transverse current force is defined as that component of force perpendicular to the vessel centerline. If a ship has a large underkeel clearance, then water can freely flow under the keel, as shown in Figure 4-8(a). If the underkeel clearance is small, as shown in Figure 4-8(b), then the ship more effectively blocks current flow, and the transverse current force on the ship increases. These effects are considered and the transverse current force is determined from the equation:

EQUATION: $$F_{yc} = 0.5\,\rho_w\ V_c^2\ L_{wL}\ T\ C_{yc}\ \sin\theta_c \qquad (10)$$

where

F_{yc} = transverse current force (newtons)
ρ_w = mass density of water (from Table 4-1)
V_c = current velocity (m/s)
L_{wL} = vessel waterline length (m)
T = average vessel draft (m)
C_{yc} = transverse current force drag coefficient
θ_c = current angle (degrees)

The transverse current force drag coefficient as formulated in *Broadside Current Forces on Moored Ships*, Seelig et al. (1992) is shown in Figure 4-9. This drag coefficient can be determined from:

Figure 4-8. Examples of Ratios of Ship Draft (T) to Water Depth (d)

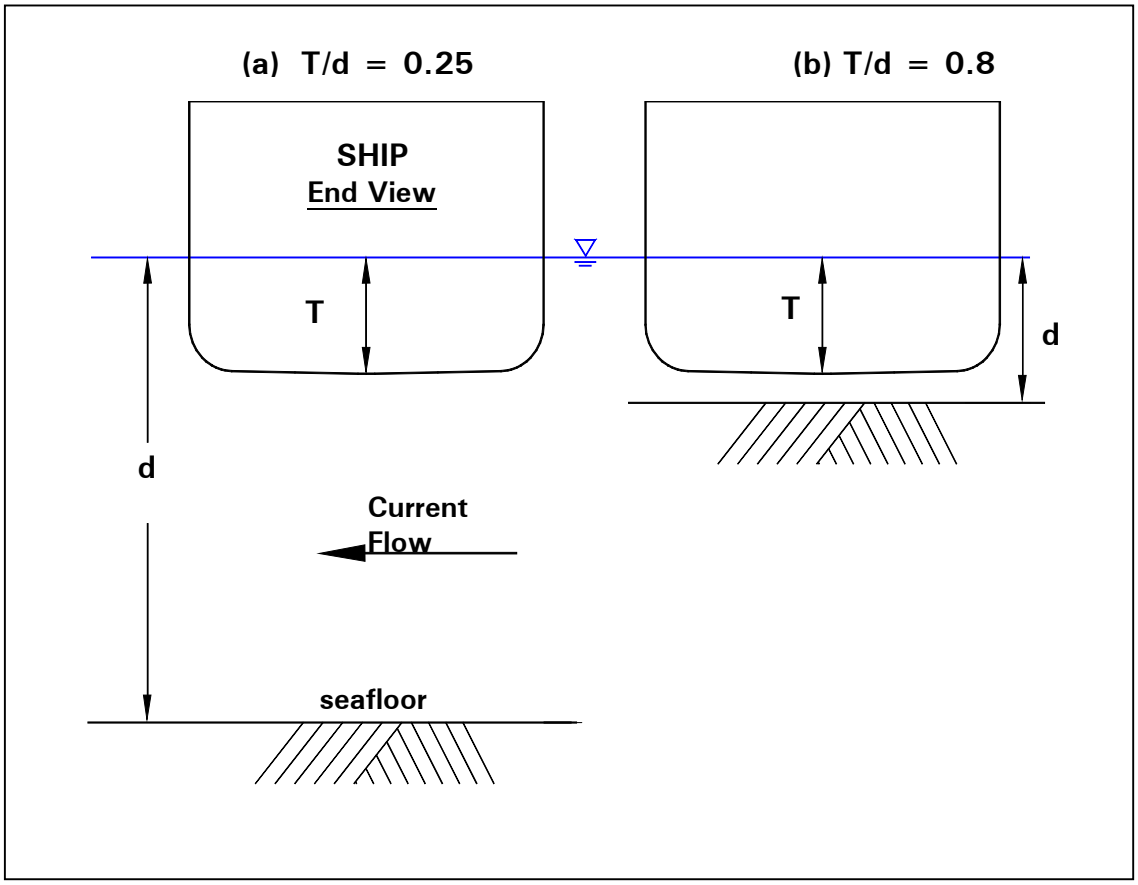

Figure 4-9. Broadside Current Drag Coefficient

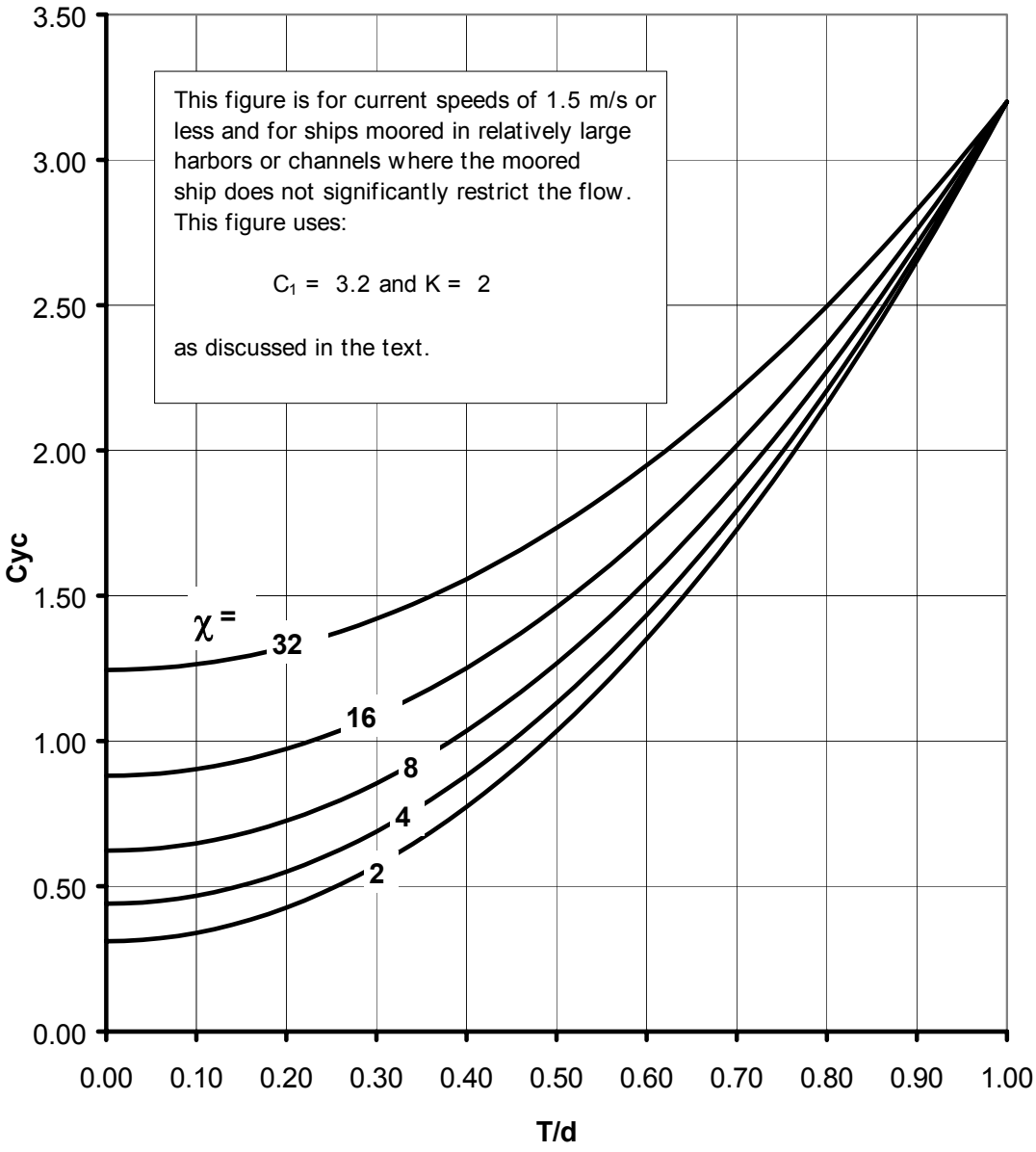

EQUATION: $$C_{yc} = C_0 + (C_1 - C_0) * (T/d)^K \quad (11)$$

where C_O = deepwater current force drag coefficient for T/d ≈ 0.0; this deepwater drag coefficient is estimated from:

EQUATION: $$C_0 = 0.22 * \sqrt{\chi} \quad (12)$$

where χ is a dimensionless ship parameter calculated as:

EQUATION: $$\chi = L_{wL}^{\ 2} * A_m / (B * V) \quad (13)$$

where L_{wL} = is the vessel length at waterline (m)
A_m = is the immersed cross-sectional area of the ship at midsection (m^2)
B = is the beam (maximum ship width at the waterline) (m), and
V = is the submerged volume of the ship, (m^3) (which can be found by taking the displacement of the vessel divided by the unit weight of water, given in Table 4-1).
C_1 = shallow water current force drag coefficient where T/d = 1.0; for currents of 1.5 m/s (2.9 knots or 4.9 ft/sec) or less; **C_1 = 3.2** is recommended
T = average vessel draft (m)
d = water depth (m)
K = dimensionless exponent; laboratory data from ship models shows:

K = 2	Wide range of ship and barge tests; <u>most all of the physical model data available can be fit with this coefficient, including submarines.</u>
K = 3	From a small number of tests on a fixed cargo ship and for a small number of tests on an old aircraft carrier, CVE-55
K = 3	From a small number of tests on an old submarine hull, SS-212

The immersed cross-sectional area of the ship at midships, A_m, can be determined from:

EQUATION: $$A_m = C_m * B * T \quad (14)$$

Values of the midship coefficient, C_m, are provided in the Ships Characteristics Database (WATERS TOOLBOX) for DOD ships.

The above methods for determining the transverse current force are recommended for normal design conditions with moderate current speeds of 1.5 m/s (2.9 knots or 4.9 ft/sec) or less and in relatively wide channels and harbors (see Seelig et al., 1992).

If the vessel is moored broadside in currents greater than 1.5 m/s (2.9 knots or 4.9 ft/sec), then scale model laboratory data show that there can be significant vessel heel/roll, which effectively increases the drag force on the vessel. In some model tests in shallow water and at high current speeds this effect was so pronounced that the model ship capsized. Mooring a vessel broadside in a high current should be avoided, if possible.

Scale physical model tests show that a vessel moored broadside in a restricted channel has increased current forces. This is because the vessel decreases the effective flow area of a restricted channel, which causes the current speed and current force to increase.

For specialized cases where:

(1) vessels are moored in current of 1.5 m/s (3 knots or 5 ft/sec) or more, and/or

(2) for vessels moored in restricted channels

then the designer should contact NFESC.

Recent full-scale measurements with a floating drydock show the transverse current force equations should also be used to compute the longitudinal drag forces for blocky vessels.

EXAMPLE: Find the current force on an FFG-7 vessel produced by a current of θ_c=90 degrees to the ship centerline with a speed of 1.5 m/s (2.9 knots or 4.9 ft/sec) in salt water for a given ship draft. At the mooring location, the harbor has a cross-sectional area much larger than the submerged ship longitudinal area, $L_{wL} * T$.

SOLUTION: Dimensions and characteristics of this vessel are summarized in the lower right portion of Figure 4-10. Transverse current drag coefficients predicted using Equation 11 are shown on this figure as a solid bold line. Physical scale model data

(U.S. Naval Academy (USNA), EW-9-90, *Evaluation of Viscous Damping Models for Single Point Mooring Simulation)* are shown as symbols in the drawing, showing that Equation 11 provides a reasonable estimate of drag coefficients. Predicted current forces for this example are given in Table 4-6.

Table 4-6. Predicted Transverse Current Forces on FFG-7 for a Current Speed of 1.5 m/s (2.9 knots)

T/d	d (m)	d (ft)	Fyc (MN)*	Fyc (kips)**
0.096	45.7	150	0.55	123
0.288	15.2	50	0.66	148
0.576	7.62	25	1.03	231
0.72	6.096	20	1.30	293
0.96	4.572	15	1.90	427

* MN = one million newtons
**kip = one thousand pounds force

This example shows that in shallow water the transverse current force can be three times or larger than in deep water for an FFG-7.

Figure 4-10. Example of Transverse Current Drag Coefficients

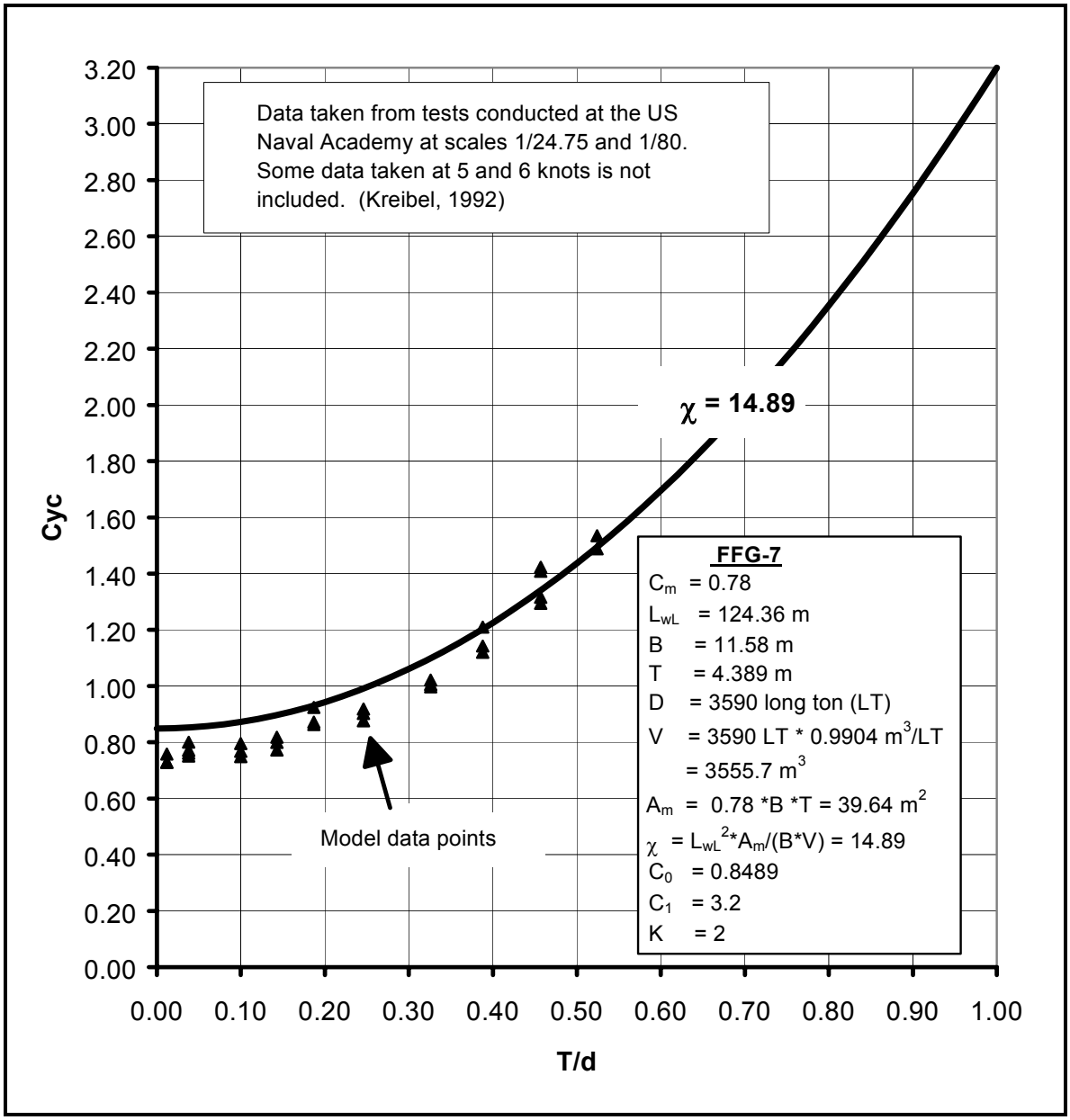

4-5.2 **Static Longitudinal Current Force for Ships.** The longitudinal current force is defined as that component of force parallel to the centerline of the vessel. This force is determined for streamlined ship-shaped vessels from the following equation (Naval Civil Engineering Laboratory (NCEL), TN-1634, *STATMOOR – A Single-Point Mooring Static Analysis Program)*:

EQUATION: $$F_{xc} = F_{x\,FORM} + F_{x\,FRICTION} + F_{x\,PROP} \quad (15)$$

where

F_{xc} = total longitudinal current load (newtons)
F_{xFORM} = longitudinal current load due to form drag (newtons)
$F_{xFRICTION}$ = longitudinal current load due to skin friction (newtons)
F_{xPROP} = longitudinal current load due to propeller drag (newtons)

The three elements of the general longitudinal current load equation, F_{xFORM}, $F_{xFRICTION}$, and F_{xPROP} are described below:

F_{xFORM} = longitudinal current load due to form drag

EQUATION: $$F_{xFORM} = \frac{1}{2}\rho_w V_c^2 B\, T\, C_{xcb} \cos(\theta_c) \quad (16)$$

where

ρ_w = mass density of water, from Table 4-1
V_c = current speed (m/s)
B = maximum vessel width at the waterline(m)
T = average vessel draft (m)
C_{xcb} = longitudinal current form drag coefficient = 0.1
θ_c = current angle (degrees)

$F_{xFRICTION}$ = longitudinal current load due to skin friction

EQUATION: $$F_{xFRICTION} = \frac{1}{2}\rho_w V_c^2 S C_{xca} \cos(\theta_c) \quad (17)$$

where

ρ_w = mass density of water, from Table 4-1
V_c = current speed (m/s)
S = wetted surface area (m^2); estimated using

EQUATION: $$S = 1.7 T L_{wL} + \left(\frac{D}{T\gamma_W}\right) \quad (18)$$

T = average vessel draft (m)
L_{wL} = waterline length of vessel (m)
D = ship displacement (newtons)
γ_W = weight density of water, from Table 4-1
C_{xca} = longitudinal skin friction coefficient, estimated using:

EQUATION: $$C_{xca} = 0.075 / \left(\left(\log_{10} R_N\right) - 2\right)^2 \quad (19)$$

R_N = Reynolds Number

EQUATION: $$R_N = \left|\frac{V_c L_{wL} \cos(\theta_c)}{\nu}\right| \quad (20)$$

ν = kinematic viscosity of water, from Table 4-1
θ_c = current angle (degrees)

F_{xPROP} = longitudinal current load due to fixed propeller drag

EQUATION: $$F_{xPROP} = \frac{1}{2}\rho_w V_c^2 A_p C_{PROP} \cos(\theta_C) \quad (21)$$

where

ρ_w = mass density of water, from Table 4-1
V_c = current speed (m/s)
A_p = propeller expanded blade area (m^2)
C_{PROP} = propeller drag coefficient = 1.0
θ_C = current angle (degrees)

EQUATION:

$$A_p = \frac{A_{Tpp}}{1.067 - 0.229\,(p/d)} = \frac{A_{Tpp}}{0.838} \qquad (22)$$

A_{Tpp} = total projected propeller area (m^2)
for an assumed propeller pitch ratio of $p/d = 1.0$

EQUATION:

$$A_{Tpp} = \frac{L_{wL}\,B}{A_R} \qquad (23)$$

A_R is a dimensionless area ratio for propellers. Typical values of this parameter for major vessel groups are given in Table 4-7.

Table 4-7. A_R for Major Vessel Groups

SHIP	AREA RATIO, A_R
Destroyer	100
Cruiser	160
Carrier	125
Cargo	240
Tanker	270
Submarine	125

Note that in these and all other engineering calculations discussed in this UFC, the user must be careful to keep units consistent.

EXAMPLE: Find the longitudinal current force with a bow-on current of θ_c=180 degrees with a current speed of 1.544 m/sec (3 knots) on a destroyer in salt water with the characteristics shown in Table 4-8.

SOLUTION: Table 4-9 shows the predicted current forces. Note that these forces are negative, since the bow-on current is in a negative "X" direction. For this destroyer, the force on the propeller is approximately two-thirds of the total longitudinal current force. For commercial ships, with relatively smaller propellers, form and friction drag produce a larger percentage of the current force.

Table 4-8. Example Destroyer

PARAMETER	SI SYSTEM	ENGLISH OR INCH-POUND SYSTEM
L_{wL}	161.2 m	529 ft
T	6.4 m	21 ft
B	16.76 m	55 ft
D, ship displacement	7.93E6 kg	7810 long tons
$C_{m;}$ estimated	0.83	0.83
S; est. from Eq 18	2963 m^2	31 897 ft^2
A_R; from Table 4-7	100	100
R_N; from Eq 20	2.09E8	2.09E8
C_{xca}; est. from Eq 19	0.00188	0.00188
Ap; est. from Eq 22	32.256 m^2	347.2 ft^2

Table 4-9. Example Longitudinal Current Forces on a Destroyer

FORCE	SI SYSTEM	ENGLISH OR INCH-POUND SYSTEM	PERCENT OF TOTAL FORCE
F_{xFORM}; Eq 15	-13.1 kN*	-2.95 kip**	22%
$F_{xFRICTION}$; Eq 16	-6.8 kN	-1.53 kip	12%
F_{xPROP}; Eq 17	-39.4 kN	-8.87 kip	66%
Total F_{xc} =	-59.4 kN	-13.4 kip	100%

* kN = one thousand newtons
**kip = one thousand pounds force

4-5.3 **Static Longitudinal Current Force for Blunt Vessels.** The methods in Chapter 4-5.2 are inappropriate for very blunt-bow vessels, such as floating drydocks. For blunt-bow vessels use the methods and equations in Chapter 4-5.1 *Static Transverse Current Force* for the longitudinal current force on the hull. In this case use the appropriate parameters as input.

For example, take the case of a floating drydock 180 feet wide with a draft of 67 feet moored in a water depth of 70 feet. A current of 1.2 knots is predicted (using methods in Chapter 4-5.1) to produce a longitudinal current force of 144.9 kips on this floating drydock. Full-scale measurements were made on the actual drydock for this case and the measured longitudinal force was 143 kips. In this example the predicted force is approximately 1% higher than measured.

4-5.4 **Static Current Yaw Moment.** The current yaw moment is defined as that component of moment acting about the vessel's vertical "Z"-axis. This moment is determined from the equation:

EQUATION: $$M_{xyc} = F_{yc}(\frac{e_c}{L_{wL}})L_{wL} \quad (24)$$

where

M_{xyc} = current yaw moment (newton*m)
F_{yc} = transverse current force (newton)
$\frac{e_c}{L_{wL}}$ = ratio of eccentricity to vessel waterline length
e_c = eccentricity of F_{yc} (m)
L_{wL} = vessel waterline length (m)

The dimensionless moment arm $\frac{e_c}{L_{wL}}$ is calculated by choosing the slope and y-intercept variables from Table 4-10 which are a function of the vessel hull. The dimensionless moment arm is dependent upon the current angle to the vessel, as shown in Equation 25:

EQUATION: $$\frac{e}{L_{wL}} = a + b * \theta_c \quad \theta_c=0° \text{ to } 180° \quad (25)$$

$$\frac{e}{L_{wL}} = a + (b * (360\deg - \theta_c)) \quad \theta_c=180° \text{ to } 360° \quad (25a)$$

where

$\frac{e_c}{L_{wL}}$ = ratio of eccentricity to vessel waterline length
a = y-intercept (refer to Table 4-10) (dimensionless)
b = slope per degree (refer to Table 4-10)
θ_c = current angle (degrees)

The above methods for determining the eccentricity ratio are recommended for normal design conditions with moderate current speeds of less than 1.5 m/s (3 knots or 5 ft/sec). Values provided in Table 4-10 are based upon least squares fit of scale model data taken for the case of ships with level keels. Data are not adequately available for evaluating the effect of trim on the current moment.

Table 4-10. Current Moment Eccentricity Ratio Variables

SHIP	a Y-INTERCEPT	b SLOPE PER DEGREE	NOTES
SERIES 60	-0.291	0.00353	Full hull form typical of cargo ships
FFG	-0.201	0.00221	“Rounded” hull typical of surface warships
CVE-55	-0.168	0.00189	Old attack aircraft carrier
SS-212	-0.244	0.00255	Old submarine

4-6 **WIND AND CURRENT FORCES AND MOMENTS ON MULTIPLE SHIPS.** If ships are moored in close proximity to one another then the nearby ship(s) can influence the forces/moments on a given ship. The best information available on the effects of nearby ships is results from physical model tests, because the physical processes involved are highly complex. NFESC Report TR-6003-OCN provides scale model test results of wind and current forces and moments for multiple identical ships. From two to six identical ships were tested and the test results were compared with test results from a single ship. Data are provided for aircraft carriers, destroyers, cargo ships, and submarines.

Cases included in NFESC Report TR-6003-OCN include: individual ships, ships in nests and ships moored on either sides of piers. Results are provided for the effects of winds and currents in both tabular and graphical form.

CHAPTER 5

ANCHOR SYSTEM DESIGN PROCEDURES

5-1 **GENERAL ANCHOR DESIGN PROCEDURE.** Anchor systems ultimately hold the mooring loads in fleet mooring systems. Anchors are used on both ships and in mooring facilities, so selection and design of anchors are included in this section.

The type and size of anchor specified depends upon certain parameters, such as those shown in Table 5-1.

The most commonly used anchors in DOD moorings are drag-embedment anchors and driven-plate anchors, so they will be discussed here. Other types of specialized anchors (shallow foundations, pile anchors, propellant-embedment anchors, rock bolts, etc.) are discussed in the NCEL *Handbook for Marine Geotechnical Engineering*.

Figures 5-1 and 5-2 illustrate typical drag-embedment anchors. Figure 5-3 illustrates a driven-plate anchor. Some characteristics of these two categories of anchors are given in Table 5-2.

Table 5-1. Anchor Specification Considerations

PARAMETER	DESCRIPTION
Holding capacity	The size/type of anchor will depend on the amount of anchor holding required.
Soils	Engineering properties and sediment layer thickness influence anchor design.
Use	If anchors will be relocated, then drag anchors are most commonly used.
Weight	The amount of weight that can be handled or carried may control anchor specification.
Equipment	The size and characteristics of installation equipment are important in anchor specification.
Directionality	Drag anchors may provide little uplift capacity and primarily hold in one direction; driven plate anchors provide high omni directional capacity.
Performance	Whether anchor will be allowed to drag or not, as well as the amount of room available for anchors systems, will influence anchor specification.

Figure 5-1. Example of a Drag-Embedment Anchor (Stabilized Stockless Anchor)

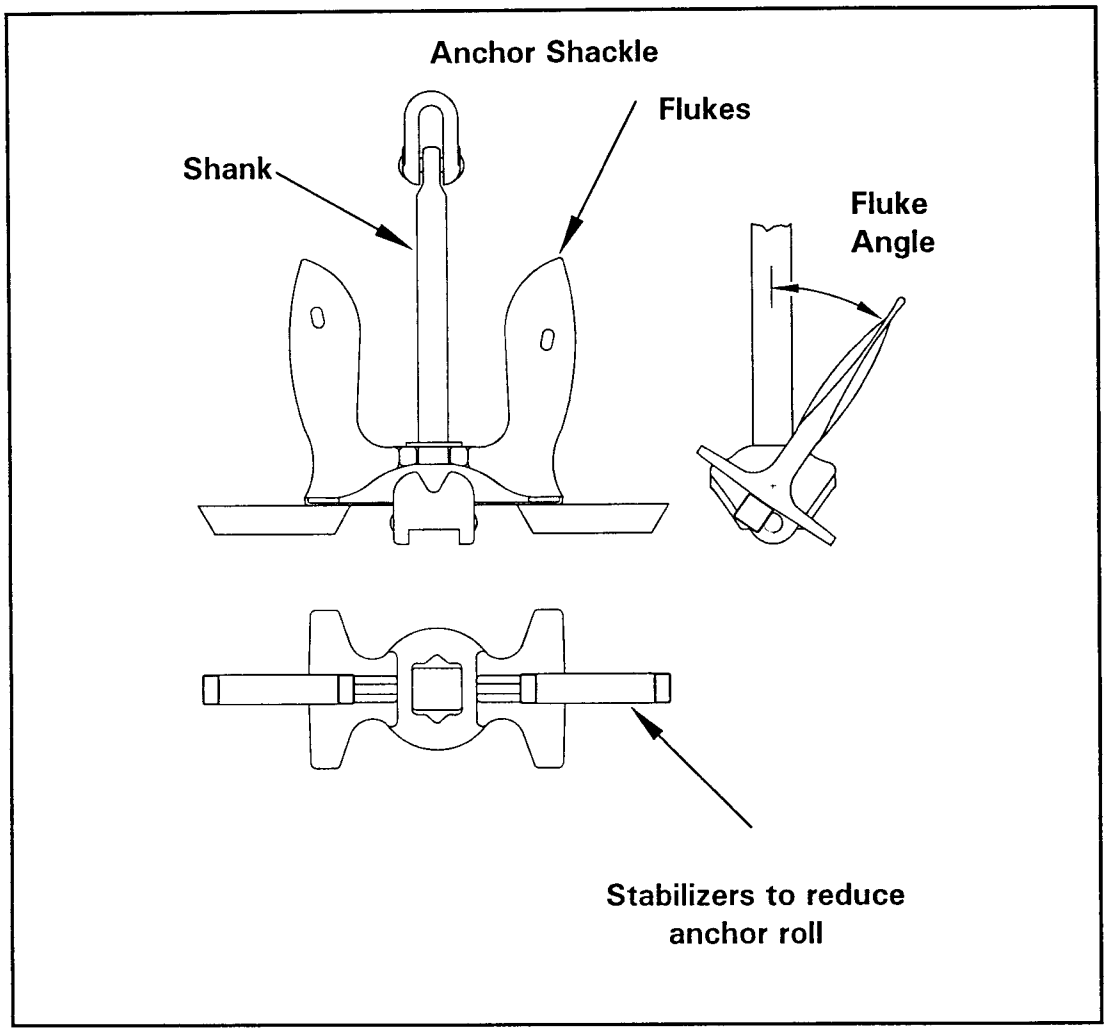

Figure 5-2. Example of a Drag-Embedment Anchor (NAVMOOR Anchor)

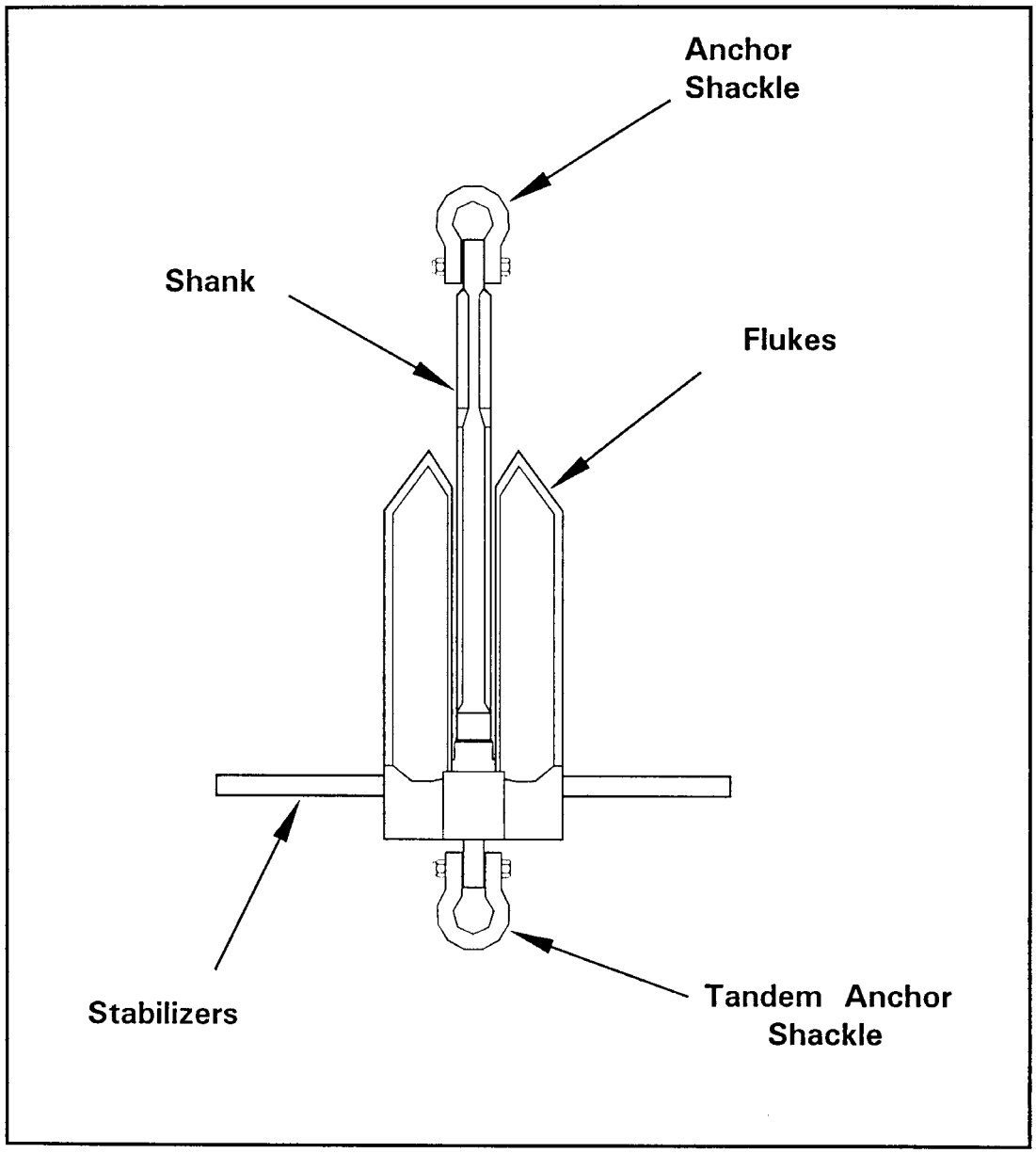

Figure 5-3. Driven-Plate Anchor

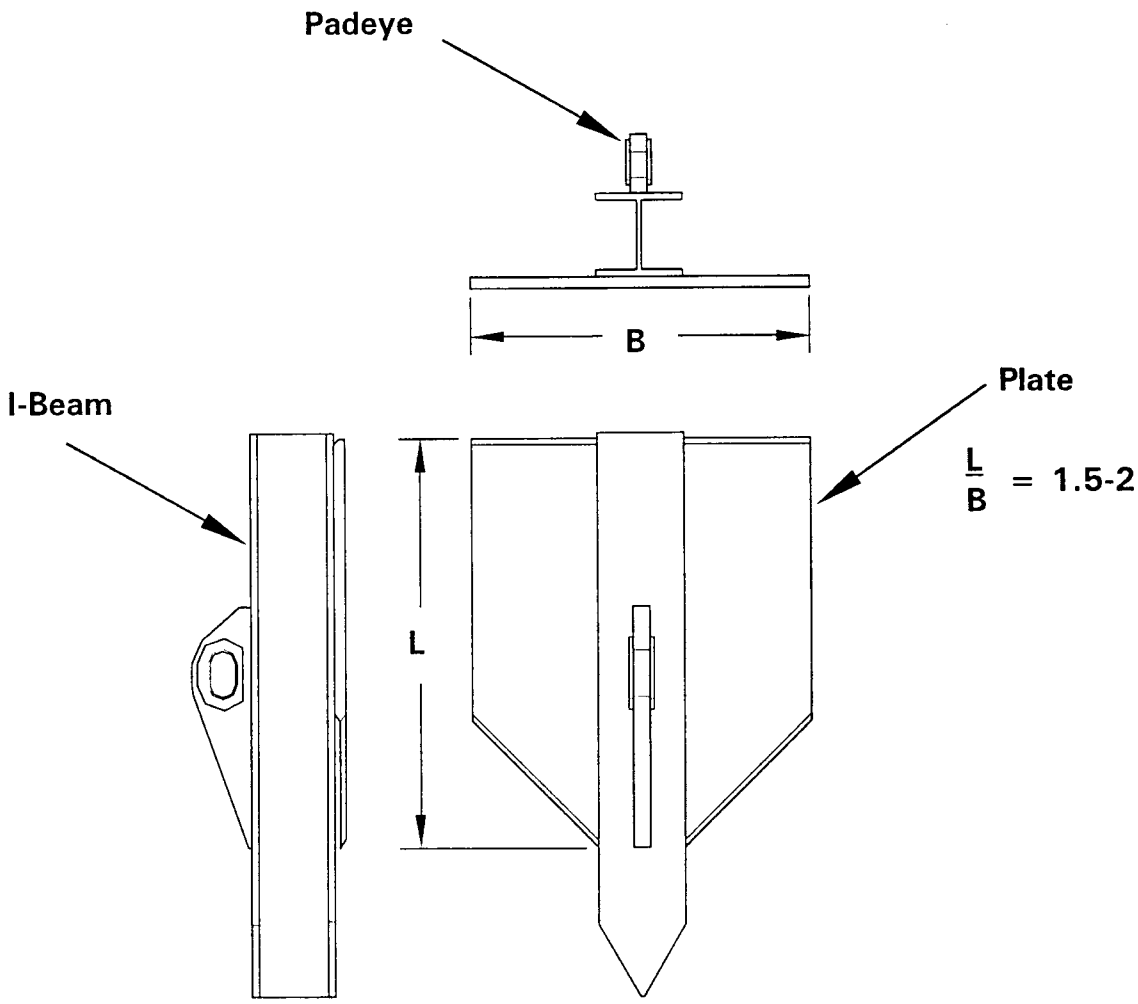

Keying flaps (not shown) can be added to the back of the anchor, opposite the padeye, to decrease the keying distance in cohesive soils (mud).

Table 5-2. Anchor Characteristics

(a) Drag-Embedment Anchors

CHARACTERISTICS	NOTES
Many basic designs and sizes are available from manufacturers.	NAVMOOR-10 & -15 and stockless of 20 to 30 kips are stocked by NFESC.
Works primarily in one horizontal direction.	Enough scope of chain and/or wire rope needs to be provided to minimize uplift forces, which can pull the anchor out. If a load is applied to a drag anchor at a horizontal axis off the centerline of the anchor, then the anchor may drag and reset.
Flukes should be set for the soil type.	Anchor performance depends strongly on the soil type. Fixing the maximum angle of the fluke will help ensure optimum performance. For mooring installations the flukes should be fixed open and stabilizers added for stockless anchors to help prevent overturning.
Adequate sediment required.	Sand layer thickness needs to be approximately one fluke length and mud needs to be 3 to 5 fluke lengths thick.
May not work in all seafloor types.	May be unreliable in very hard clay, gravel, coral, or rock seafloors; and in highly layered seafloors.
May not work well for sloping seafloors.	If the seafloor has a slope of more than several degrees, then the anchor may not hold reliably in the down-slope direction.

Table 5-2. (continued) Anchor Characteristics

(a) Drag-Embedment Anchors (Continued)

Anchor can drag.	If the anchor is overloaded at a slow enough rate, then the anchor can drag, which reduces the peak load. Anchor dragging can be a problem if the room for mooring is restricted. If adequate room is available then anchor drag can help prevent failure of other mooring components.
Anchors can be reused.	Drag-embedment anchors can be recovered and reused.
Proof loading recommended.	Pulling the anchor at the design load in the design direction will help set the anchor and assure that the soil/anchor interaction provides adequate holding.

Table 5-2. (continued) Anchor Characteristics

(b) Driven-Plate Anchors

CHARACTERISTICS	NOTES
Size and design of anchor are selected to provide adequate holding, to allow driving, and to provide adequate structural capacity.	These anchors have been used in a variety of soils from soft mud to hard coral. A driving analysis is recommended for hard soil, because the anchor must be able to be driven in order to work.
Multi-directional.	Can be used on short scope, since the anchor resists uplift forces. One plate anchor may be used to replace several drag anchor legs, since the anchors are multi-directional.
Anchors designed for the soil type.	Anchors designed for the soil engineering characteristics at the site.
Adequate sediment required.	A minimum of several fluke lengths of sediment is required to provide for keying and allow the anchor to hold (NFESC TR-2039-OCN, *Design Guide for Pile-Driven Plate Anchors*).
Anchor is fixed.	The anchor will not drag, so this type of anchor is well suited to locations with limited mooring area available. The anchors cannot be recovered or inspected.
Proof loading recommended.	Pulling the anchor at the design load in the design direction will help key the anchor and assure that the soil/anchor interaction provides adequate holding.
Installation equipment.	Mobilization can be expensive, so installing a number of anchors at a time reduces the unit installation cost.

5-2 **DRAG-EMBEDMENT ANCHOR SPECIFICATION.** Drag-embedment anchors are carried on ships and used in many fleet-mooring facilities. Key considerations in selecting an anchor are: soil type, anchoring holding capacity, anchor weight, anchor stowage, cost, availability, and installation assets. Note that in SI units the anchor mass is used to characterize anchor size, while in U.S. customary units the anchor weight as a force is used.

Drag-embedment anchor holding capacities have been measured in full-scale tests, modeled in the laboratory, and derived from soil analyses. Empirical anchor holding curves were developed from this information (Naval Civil Engineering Laboratory (NCEL), TDS 83-08R, *Drag Embedment Anchors for Navy Moorings*). Predicted static ultimate anchor holding is given by:

EQUATION: $$H_M = H_R(W_A / W_R)^b \quad (26)$$

where

H_M =	ultimate anchor system static holding capacity (kips or kN)
H_R =	reference static holding capacity
W_A =	weight of the anchor in air (for SI units use anchor weight in kilograms; for U.S. units use anchor weight in pounds force)
W_R =	reference anchor weight in air (for SI units use 4536 kg; for U.S. units use 10000 lbf)
b =	exponent

Values of H_R and b depend on the anchor and soil types. Values of these parameters are given in U.S. customary units in Table 5-3 and for SI units in Table 5-4.

Figures 5-4 and 5-5 give holding capacities of selected anchors for mud and sand seafloors.

Table 5-3. Drag Anchor Holding Parameters U.S. Customary

Anchor Type (*a*)	SOFT SOILS (Soft clays and silts)		HARD SOILS (Sands and stiff clays)	
	H_R (kips)	b	H_R (kips)	b
Boss	210	0.94	270	0.94
BRUCE Cast	32	0.92	250	0.8
BRUCE Flat Fluke Twin Shank	250	0.92	*(c)*	*(c)*
BRUCE Twin Shank	189	0.92	210	0.94
Danforth	87	0.92	126	0.8
Flipper Delta	139	0.92	*(c)*	*(c)*
G.S. AC-14	87	0.92	126	0.8
Hook	189	0.92	100	0.8
LWT (Lightweight)	87	0.92	126	0.8
Moorfast	117	0.92 *(i)*	60	0.8
			100 *(d)*	0.8
NAVMOOR	210	0.94	270	0.94
Offdrill II	117	0.92 *(i)*	60	0.8
			100 *(d)*	0.8
STATO	210	0.94	250 *(e)*	0.94
			190 *(f)*	0.94
STEVDIG	139	0.92	290	0.8
STEVFIX	189	0.92	290	0.8
STEVIN	139	0.92	165	0.8
STEVMUD	250	0.92	*(g)*	*(g)*
STEVPRIS (straight shank)	189	0.92	210	0.94
Stockless (fixed fluke)	46	0.92	70	0.8
			44 *(h)*	0.8
Stockless (movable fluke)	24	0.92	70	0.8
			44 *(h)*	0.8

(a) Fluke angles set for 50 deg in soft soils and according to manufacturer's specifications in hard soils, except when otherwise noted.

(b) "b" is an exponent constant.

(c) No data available.

(d) For 28-deg fluke angle.

(e) For 30-deg fluke angle.

(f) For dense sand conditions (near shore).

(g) Anchor not used in this seafloor condition.

(h) For 48-deg fluke angle.

(i) For 20-deg fluke angle (from API 2SK effective March 1, 1997).

Table 5-4. Drag Anchor Holding Parameters SI Units

Anchor Type (*a*)	SOFT SOILS (Soft clays and silts)		HARD SOILS (Sands and stiff clays)	
	H_R (kN)	b	H_R (kN)	b
Boss	934	0.94	1201	0.94
BRUCE Cast	142	0.92	1112	0.8
BRUCE Flat Fluke Twin Shank	1112	0.92	*(c)*	*(c)*
BRUCE Twin Shank	841	0.92	934	0.94
Danforth	387	0.92	560	0.8
Flipper Delta	618	0.92	*(c)*	*(c)*
G.S. AC-14	387	0.92	560	0.8
Hook	841	0.92	445	0.8
LWT (Lightweight)	387	0.92	560	0.8
Moorfast	520	0.92 *(i)*	267	0.8
			445 *(d)*	0.8
NAVMOOR	934	0.94	1201	0.94
Offdrill II	520	0.92 *(i)*	267	0.8
			445 *(d)*	0.8
STATO	934	0.94	1112 *(e)*	0.94
			845 *(f)*	0.94
STEVDIG	618	0.92	1290	0.8
STEVFIX	841	0.92	1290	0.8
STEVIN	618	0.92	734	0.8
STEVMUD	1112	0.92	*(g)*	*(g)*
STEVPRIS (straight shank)	841	0.92	934	0.94
Stockless (fixed fluke)	205	0.92	311	0.8
			196 *(h)*	0.8
Stockless (movable fluke)	107	0.92	311	0.8
			196 *(h)*	0.8

(a) Fluke angles set for 50 deg in soft soils and according to manufacturer's specifications in hard soils, except when otherwise noted.

(b) "b" is an exponent constant.

(c) No data available.

(d) For 28-deg fluke angle.

(e) For 30-deg fluke angle.

(f) For dense sand conditions (near shore).

(g) Anchor not used in this seafloor condition.

(h) For 48-deg fluke angle.

(i) For 20-deg fluke angle (from API 2SK effective March 1, 1997).

Figure 5-4.Anchor System Holding Capacity in Cohesive Soil (Mud)

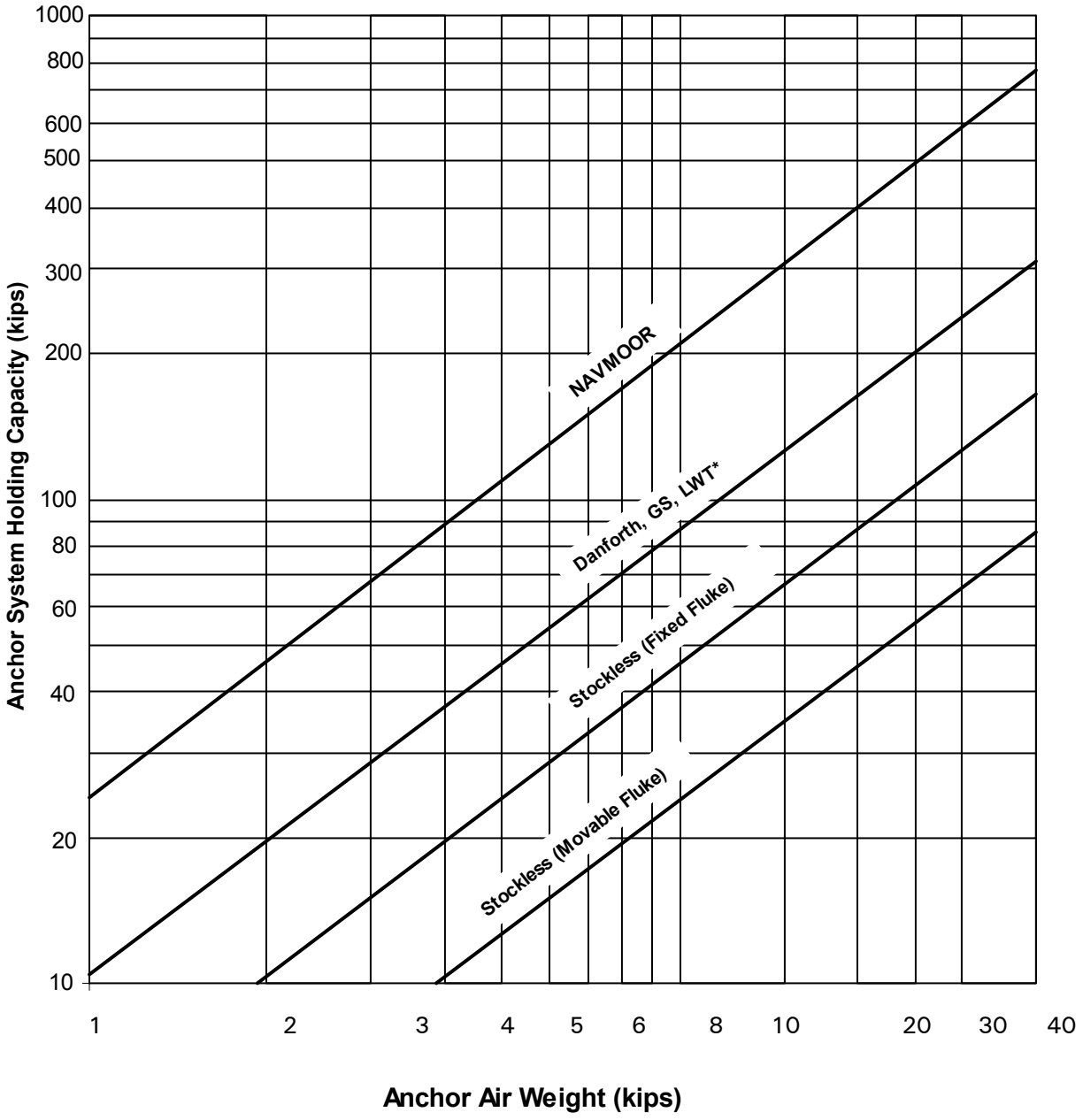

Figure 5-5 Anchor System Holding Capacity in Cohesionless Soil (Sand)

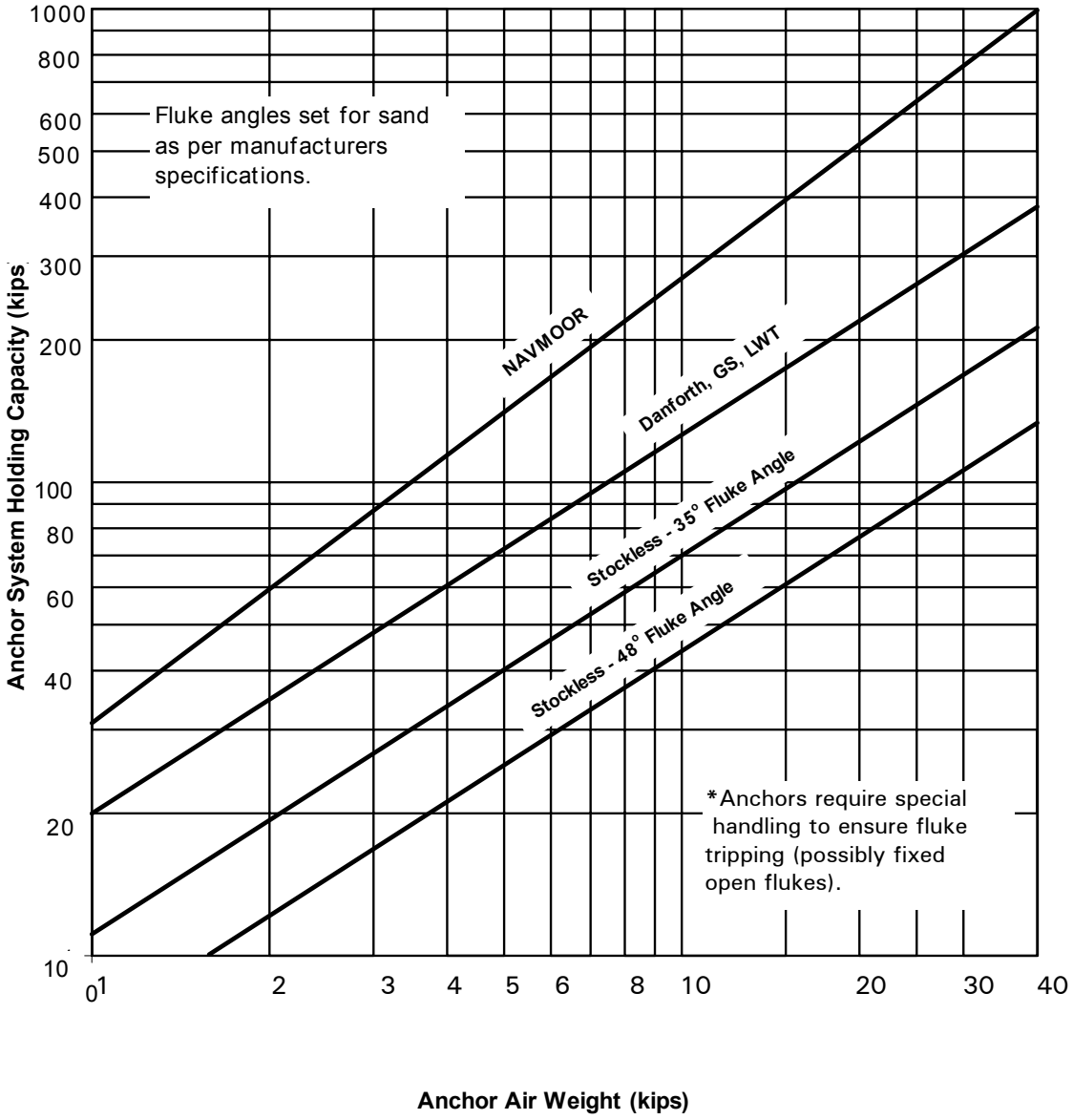

5-3 **DRIVEN-PLATE ANCHOR DESIGN.** NFESC has found that various types of plate anchors are an efficient and cost effective method of providing permanent moorings. Detailed design procedures for these anchors are given in NFESC TR-2039-OCN, *Design Guide for Pile-Driven Plate Anchors*. Additional information is given in NCEL *Handbook for Marine Geotechnical Engineering*. An overview of plate anchor design is given here.

A driven-plate anchor consists of the components shown in Figure 5-3 and discussed in Table 5-5.

Table 5-5. Driven-Plate Anchor Components

COMPONENT	NOTES
Plate	Size the area and thickness of the plate to hold the required working load in the given soils. A plate length-to-width ratio of L/B = 1.5 to 2 is shown by practical experience to give optimum performance.
I-Beam	Size the beam to provide: a driving member; stiffness and strength to the anchor; and to separate the padeye from the plate to provide a moment that helps the anchor key during proof testing.
Padeye	Size this structure as the point where the chain or wire rope is shackled onto the anchor prior to driving.
Follower	Length and size specified so assembly can safely be picked up, driven, and removed.
Hammer	Sized to drive the anchor safely. In most cases it is preferable to use an impact hammer. A vibratory hammer may be used in cohesionless soils or very soft mud. A vibratory hammer may also be useful during follower extraction.
Template	A structure is added to the side of the driving platform to keep the follower in position during setup and driving.

Installation of a plate anchor is illustrated in Figure 5-6. Installation consists of three key steps, as outlined in Table 5-6.

Table 5-6. Major Steps in Driven-Plate Anchor Installation

STEP	DESCRIPTION
1	Moor installation platform, place anchor in follower, shackle anchor to chain, place the follower/anchor assembly at the specified anchor location and drive the anchor to the required depth in the sediment (record driving blow count).
2	Remove follower with a crane and/or extractor.
3	Proof load the anchor. This keys the anchor, proves that the anchor holds the design load, and removes slack from the chain.

Figure 5-6. Major Steps of Driven-Plate Anchor Installation

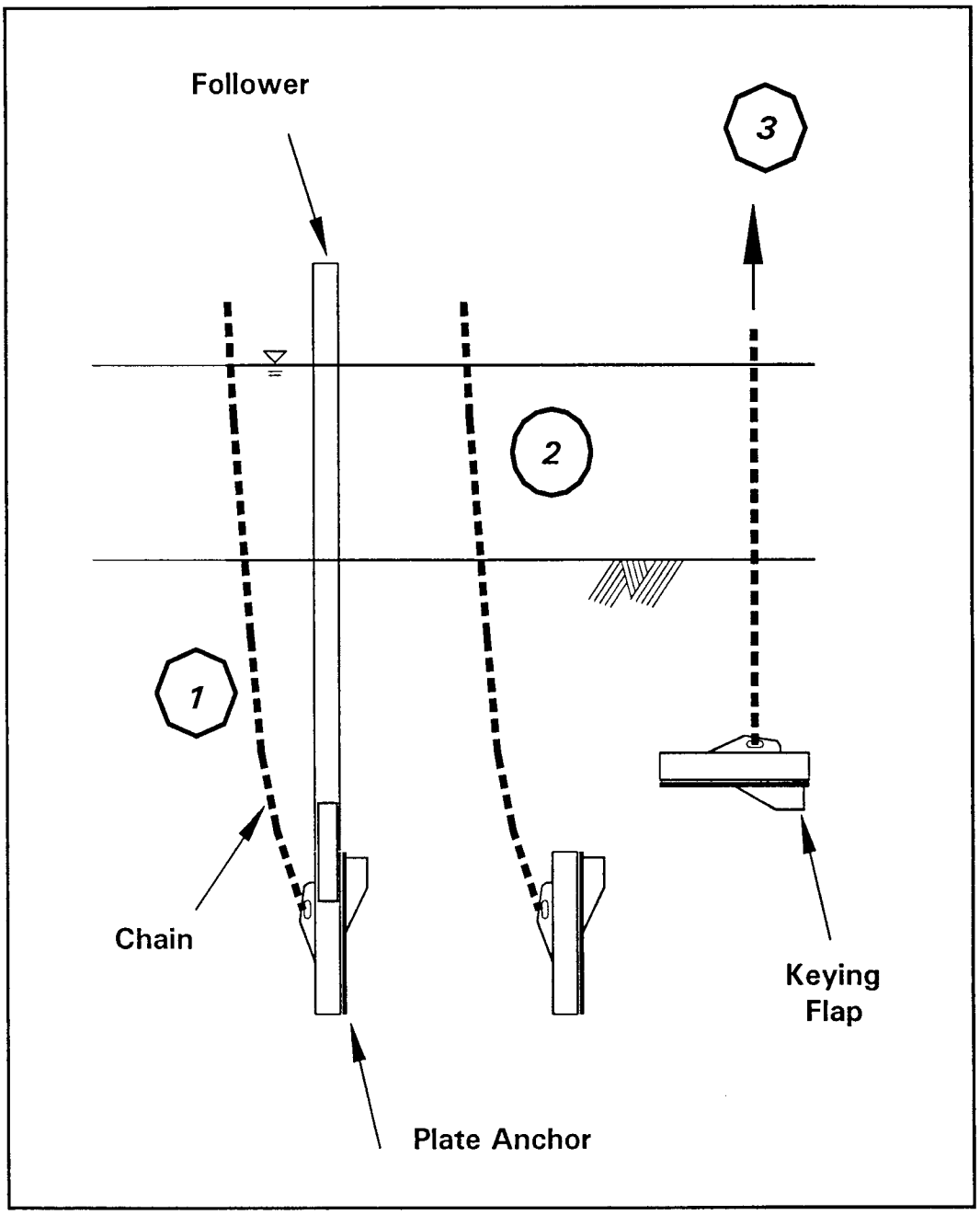

Examples of plate anchors that have been used at various sites are summarized in Table 5-7.

Table 5-7. Typical Driven-Plate Anchors

SIZE/LOCATION	SEAFLOOR TYPE	DRIVING DISTANCE INTO COMPOTENT SEDIMENT	PROOF LOAD
0.91 m x 1.22 m (3 ft x 4 ft) Philadelphia, PA	Hard Clay	9 m (30 ft)	670 kN (150 kips) Vertical
0.61 m x 1.22 m (2 ft x 4 ft) San Diego, CA	Sand (Medium)	8 m (27 ft)	890 kN (200 kips) Vertical
m x 1.83 m (5 ft x 6 ft) Guam	Coral Limestone	12 m (40 ft)	1000 kN (225 kips) Vertical
m x 3.35 m (6 ft x 11 ft) Pearl Harbor, HI	Mud	21 m (70 ft)	890 kN (200 kips) Horizontal

The recommended minimum plate anchor spacing is five times the anchor width for mud or clay and 10 times the anchor width for sand.

CHAPTER 6

FACILITY MOORING EQUIPMENT GUIDELINES

6-1 **INTRODUCTION.** Equipment most often used in mooring facilities is discussed in this section.

6-2 **KEY MOORING COMPONENTS.** A mooring is a structure that holds a ship in a position using tension and compression members. The resulting mooring loads are transferred to the earth via anchors or some other members, such as pier piles or a wharf structure.

6-2.1 **Tension Members.** The most commonly used tension members in moorings are:

Chain
Synthetic line
Wire rope
Tension bar buoys

6-2.2 **Compression Members.** The most commonly used compression members in moorings are:

Marine fenders
Fender Piles
Camels
Mooring dolphins
Piers
Wharves

6-3 **ANCHORS.** Anchors are structures used to transmit mooring loads to the earth. Anchors operate on the basis of soil structure interaction, so their behavior can be complex. Fortunately, the U.S. Navy has extensive experience with full-scale testing of a number of different anchor types in a wide variety of soils and conditions (NCEL *Handbook for Marine Geotechnical Engineering*). This experience provides a strong basis for design. However, due to the complex nature of structure/soil interaction, it is strongly recommended that anchors always be pull tested to their design load during installation. Design and illustration of some of the common anchor types routinely used are discussed in Chapter 5 of this UFC, and in NCEL *Handbook for Marine Geotechnical Engineering.*

A brief summary of some anchor experience is given in Table 6-1.

Table 6-1. Practical Experience With Anchors

ANCHOR TYPE	DESCRIPTION
Low Efficiency Drag Embedment Anchors (i.e., Stockless)	Reliable if stabilizers are added (see Figure 5-1). Not very efficient, but reliable through 'brute force'. Extensive experience. A large number available in the U.S. Navy Fleet Mooring inventory. Efficiency increased by fixing the flukes for the type of soil at the site. Should be set and proof tested during installation. Can be used in tandem in various configurations (NCEL TDS 83-05, *Multiple STOCKLESS Anchors for Navy Fleet Moorings*). Vertical angle of tension member should be approximately zero at the seafloor.
High Efficiency Drag Embedment Anchors (i.e., NAVMOOR)	Very efficient, highly reliable and especially designed so it can easily be used in tandem (NCEL TN-1774, *Single and Tandem Anchor Performance of the New Navy Mooring Anchor*). Excellent in a wide variety of soil conditions. These are available in the U.S. Navy Fleet Mooring inventory. Should be set and proof tested during installation. Vertical angle of tension member should be approximately zero at the seafloor in most cases.

Table 6-1. (Continued) Practical Experience With Anchors

ANCHOR TYPE	DESCRIPTION
Driven-Plate Anchors	Extremely efficient, can be designed to hold extremely high loads and will work in a wide variety of soils from mud to limestone (NFESC TR-2039, *Design Guide for Pile-Driven Plate Anchors*). Can take loads at any angle, so short scope moorings can be used. Extensive experience. Requires a follower and driving equipment. Most cost effective if a number are to be installed at one site at one time. Should be keyed and proof tested during installation.
Deadweight Anchors	Very low efficiency. Full-scale tests (NCEL, *Fleet Mooring Test Program – Pearl Harbor*) show anchor-holding capacity dramatically decreases after anchor starts dragging, just when the anchor capacity required may be most needed. As a result, use of this type of anchor can be dangerous. Deadweight anchors should be used with caution. NFESC TR-6037-OCN provides an Improved Pearl Harbor Anchor design.
Other anchor types	NCEL *Handbook for Marine Geotechnical Engineering* gives extensive technical and practical information on a wide variety of anchors and soil/structure interaction.

A summary sheet describing the stockless anchors in the U.S. Navy Fleet Mooring inventory is given in Table 6-2. NAVMOOR anchors in inventory are described in Table 6-3.

Table 6-2. Stockless Anchors in the U.S. Navy Fleet Mooring Inventory

ANCHOR IN AIR WEIGHT (1000 lbf)	20	25	30
LENGTH *(inches)*	127.25	137	145.63
STABILIZER EXTENSION *(inches)*	45	48	50
FLUKE LENGTH *(ft)*	7.65	8.24	8.94
FLUKE AREA *(sq. ft)*	35.1	40.7	46.9
SAFE HOLDING CAPACITIES WITH FS = 1.5*			
MUD SEAFLOOR Fluke Angle = 48 deg			
Minimum MUD Thickness (ft)**	22 ft	24 ft	25 ft
Typical Anchor Drag (ft)***	31 ft	33 ft	36 ft
Single Holding (x1000 lbf)	58	71	84
Tandem Holding (x1000 lbf)	116	142	169
SAND SEAFLOOR Fluke Angle = 35 deg			
Minimum SAND Thickness (ft)**	8 ft	8 ft	9 ft
Typical Anchor Drag (ft)***	33 ft	36 ft	39 ft
Single Holding (x1000 lbf)	81	97	112
Tandem Holding (x1000 lbf)	163	194	225

* design mooring properly ** for ultimate holding*** fix flukes open

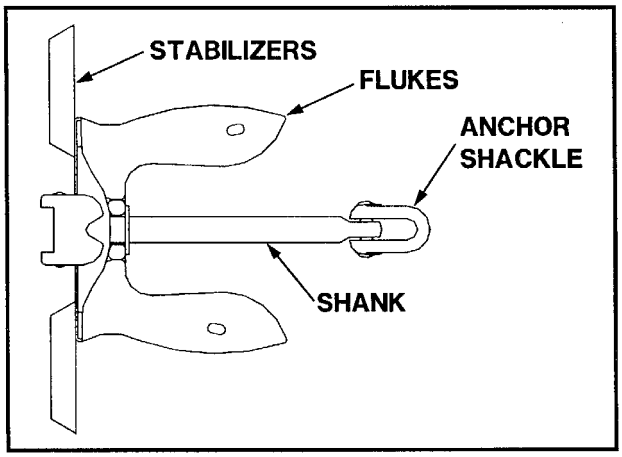

Table 6-3. NAVMOOR Anchors in the U.S. Navy Fleet Mooring Inventory

ANCHOR SIZE =	NAVMOOR-12	NAVMOOR-15
IN AIR WEIGHT *(pounds)*	12400	19200
LENGTH OVERALL *(inches)*	192	219
STABILIZER WIDTH *(inches)*	192	219
FLUKE LENGTH *(ft)*	8.54	9.73
FLUKE AREA *(sq. ft)*	38.54	50.07
SAFE HOLDING CAPACITIES FS = 2*		
MUD SEAFLOOR Fluke Angle = 50 deg		
Minimum MUD Thickness (ft)**	38 ft	44 ft
Typical Anchor Drag (ft)***	30-35 ft	35-40 ft
Single Holding (x1000 lbf)	125	168
Tandem Holding (x1000 lbf)	310	420
SAND SEAFLOOR Fluke Angle = 32 deg		
Minimum SAND Thickness (ft)**	9 ft	10 ft
Typical Anchor Drag (ft)***	25 ft	30 ft
Single Holding (x1000 lbf)	160	215
Tandem Holding (x1000 lbf)	400	535

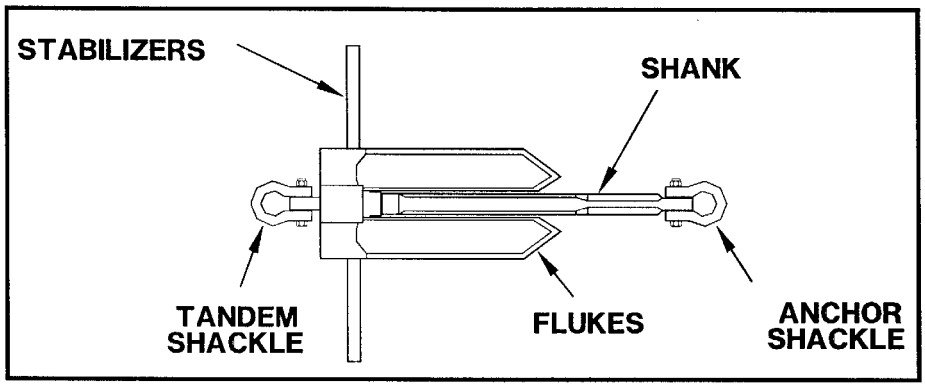

* design mooring properly ** for ultimate holding *** fix flukes open

6-4 **CHAIN AND FITTINGS.** Chain is often used in fleet moorings because chain:

Is easy to terminate
Can easily be lengthened or shortened
Is durable
Is easy to inspect
Is easy to provide cathodic protection
Has extensive experience
Is available
Is cost effective
Provides catenary effects

DOD commonly uses stud link chain, with each chain link formed by bending and butt-welding a single bar of steel. Chain used in fleet moorings is Grade 3 stud link chain specifically designed for long-term in-water use (Naval Facilities Engineering Service Center (NFESC), FPO-1-89(PD1), *Purchase Description for Fleet Mooring Chain and Accessories*). This chain is designated as FM3. Properties of FM3 carried in stock are shown in Table 6-4. Anodes for use on each link of FM3 chain, designed for diver replacement, are described in Table 6-5. Note that oversized anodes may be used to extend the anode life and increase the time interval required for anode replacement.

Older ships may use Die-Lock chain (not shown), which was made by pressing together male and female parts to form each link. Die-Lock is not recommended for long-term in-water use, because water may seep in between the male and female parts. The resulting corrosion is difficult to inspect.

Chain routinely comes in 90-foot (27.4-meter) lengths called ‘shots’. A number of other accessories are used with chain, as shown in Figure 6-1. For example, shots of chain are connected together with chain joining links. Anchor joining links are used to connect chain to anchors. Ground rings provide an attachment point for multiple chains. Buoy swivels are used to connect chain to buoys. Refer to NFESC TR-6014-OCN, *Mooring Design Physical and Empirical Data* and NFESC FPO-1-89(PD1) for additional information on chain and fittings.

Table 6-4. FM3 Mooring Chain Characteristics

NOMINAL SIZE *(inches)*	1.75	2	2.25	2.5	2.75	3.5	4
NUMBER OF LINKS PER SHOT	153	133	119	107	97	77	67
LINK LENGTH*(inches)*	10.6	12.2	13.7	15.2	16.7	21.3	24.3
WEIGHT PER SHOT IN AIR *(lbf)*	2525	3276	4143	5138	6250	10258	13358
WEIGHT PER LINK IN AIR *(lbf)*	16.5	24.6	34.8	48	64.4	133.2	199.4
WEIGHT PER FOOT SUB. *(lbs/ft)*	26.2	33.9	42.6	52.7	63.8	104.1	135.2
BREAKING STRENGTH *(thousands lbf)*	352	454	570	692	826	1285	1632
WORKING STRENGTH (FS=3) *(thousands lbf)*	117.2	151.2	189.8	230.4	275.1	427.9	543.5

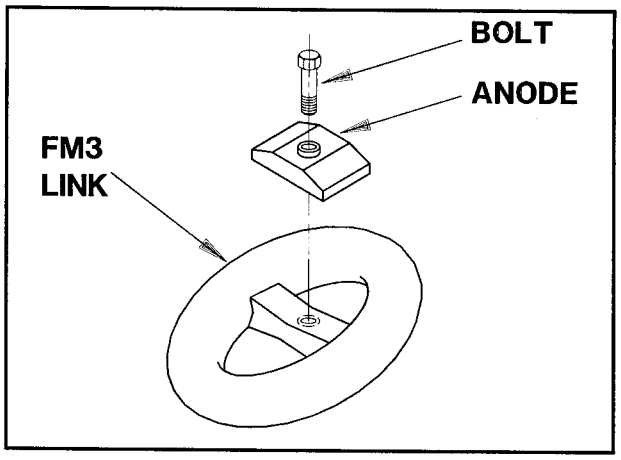

Table 6-5. Properties of FM3 Chain Anodes

NOMINAL SIZE *(inches)*	1.75	2	2.25	2.5	2.75	3.5	4
ANODE WEIGHT *(lbs)*	0.80	1.10	1.38	1.70	2.04	3.58	4.41
SCREW LENGTH *(inches)*	1.25	1.50	1.75	1.75	2.00	2.25	2.25
ANODE WIDTH *(inches)*	1.50	1.62	1.75	1.94	2.06	2.38	2.69
LINK GAP *(lbf)*	3.74	4.24	4.74	5.24	5.74	7.48	8.48
ANODES PER FULL DRUM	1106	822	615	550	400	158	122
WEIGHT PER FULL DRUM *(approx. lbf)*	976	979	917	993	869	602	550

NOTE: 1. ALL SCREWS ARE .375-16UNC-2A, GRADE 5, HEX CAP
2. 4.00 INCH ANODES FIT ALL CHAIN SIZES
3. ALL SCREW HEADS ARE 9/16 INCH

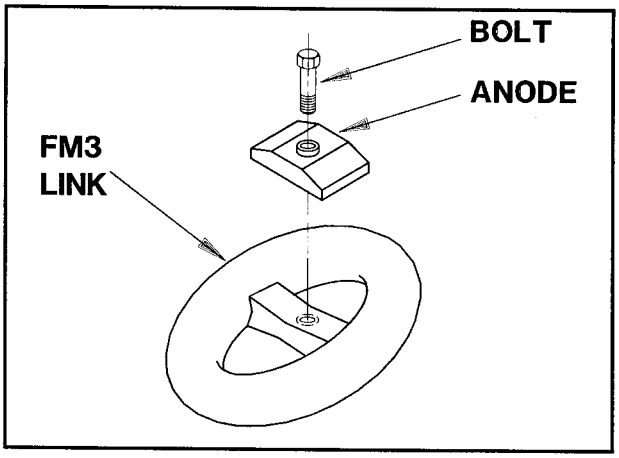

Figure 6-1. Chain Fittings

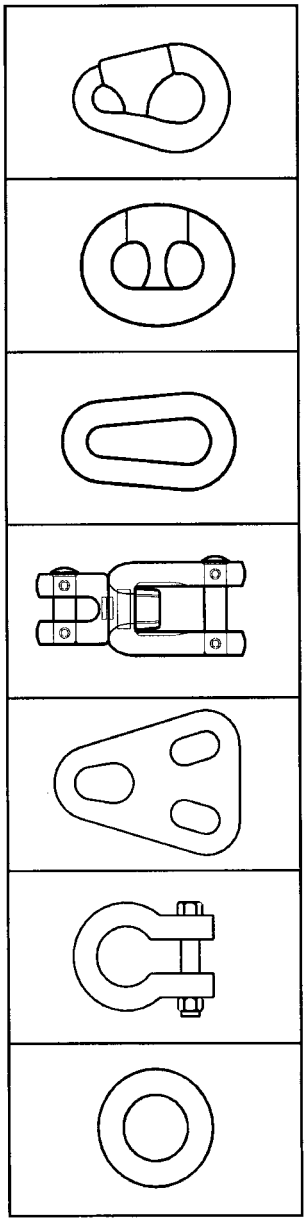

ANCHOR JOINING LINK - CONNECT CHAIN TO ANCHORS AND GROUND RINGS

CHAIN JOINING LINK - CONNECT CHAIN SHOTS TOGETHER

PEAR LINK - USED ON BUOYS AS A MOORING ATTACHMENT POINT

SWIVEL SHACKLE - USED TO CONNECT A RISER CHAIN TO A BUOY

FLOUNDER PLATE - USED TO CONNECT MULTIPLE CHAINS TOGETHER

SHACKLE - USED FOR CONNECTION AND MOORING (WELD NUT TO PIN)

GROUND RING - USED TO CONNECT MULTIPLE CHAINS TOGETHER

6-5 **BUOYS.** There are two buoys commonly used on U.S. Navy Fleet moorings: an 8-foot diameter buoy and a 12-foot diameter buoy. These buoys have a polyurethane shell, are filled with foam, and have a tension bar to transmit mooring loads to the chain. Properties of these buoys are given in Table 6-6. Some of the key features of these buoys are that they require little maintenance and they are self-fendering. A variety of older steel buoys in use are being phased out, due to their relatively high maintenance cost. Some of the factors to consider in selecting the type of mooring buoy to use are: availability, size, cost, durability, maintenance, inspection, disposal and similar factors.

6-6 **SINKERS.** Sinkers are placed on fleet moorings to tune the static and dynamic behavior of a mooring. Sinkers are usually made of concrete or low cost metal. Key sinker parameters that can be specified in design include:

Mass
Weight
Location
Number
Size
Design

Special care needs to be taken in the design and inspection of lifting eyes and attachment points on sinkers to ensure that they are safe.

6-7 **MOORING LINES.** The most common tension member lines used are synthetic fiber ropes and wire rope. Synthetic lines have the advantage of easy handling and some types have stretch, which can be used to fine tune static and dynamic mooring behavior and aid in load sharing between tension members. Wire rope has the advantage of durability.

6-7.1 **Synthetic Fiber Ropes.** Mooring lines are formed by weaving a number of strands together to form a composite tension member. Lines are made of different types of fiber and various constructions. Stretch/strain properties of selected lines are shown in Table 6-7 and Figure 6-2. Engineering characteristics of some double braided nylon and polyester lines are given in Tables 6-8 and 6-9. Additional information is provided in NFESC TR-6014-OCN, *Mooring Design Physical and Empirical Data*. The size and type of synthetic line specified in a given design will depend upon parameters such as those shown in Table 6-10. A discussion of the use of various mooring line types is given in Appendix A.

Table 6-6. Foam-Filled Polyurethane Coated Buoys

PARAMETERS	8-FOOT BUOY	12-FOOT BUOY
Weight in Air	4,500 lbs	10,400 lbs
Net Buoyancy	15,000 lbs	39,000 lbs
Working Buoyancy (24" FB)	6,150 lbs	20,320 lbs
Proof Load on Bar (0.6 Fy)	300 kips	600 kips
Working Load of Bar (0.3Fy)	150 kips	300 kips
Diameter Overall (w/fenders)	8 ft 6 in	12 ft
Diameter of Hull	8 ft	11 ft 6 in
Length of Hull Overall	7 ft 9 in	8 ft 9 in
Length of Tension Bar	11 ft 4 In	13 ft I in
Height of Cylindrical Portion	4 ft 4 in	5 ft 7 in
Height of Conical Portion	3 ft 5 in	3 ft 2 in
Bar Thickness (top/bottom)	4.5/3 in	5/3.5 in
Top Padeye ID (top/bottom)	3.5/3.5 in	4.5/5 in
Shackle on Top	3 inch	4 inch
Maximum Chain Size	2.75 inch	4 inch
Min. Recommended Riser Wt	1,068 lbs	7,500 lbs
Riser Wt for 24" freeboard	8,850 lbs	18,680 lbs
Max. Recommended Riser Wt	7,500 lbs	21,264 lbs
Moment to Heel 1 deg:		
Min Riser Wt	108 ft-lbs	1,183 ft-lbs
Max Riser Wt	648 ft-lbs	2,910 ft-lbs

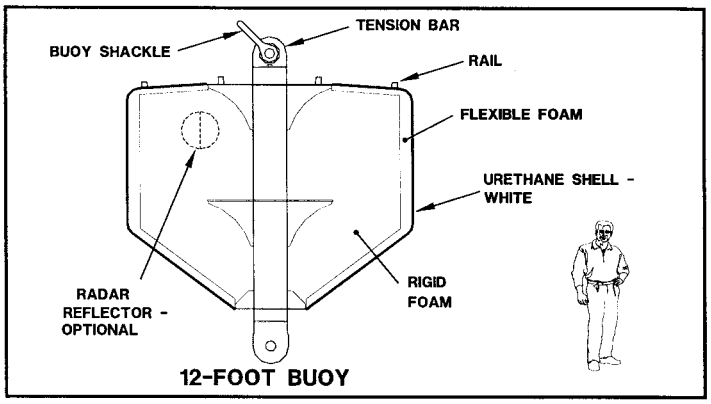

Table 6-7. Stretch of Synthetic Lines

% Break Strength (T/Tb)	WIRE ROPE & STEEL CORE % Stretch (1)	12-STRAND HMWPE % Stretch (2)	KEVLAR 4-STRAND % Stretch (3)	DOUBLE BRAIDED POLY-ESTER % Stretch (4)	NYLON 8-STRAND % Stretch (5)	DOUBLE BRAIDED NYLON % Stretch (6)
0	0.000	0.000	0.000	0.000	0.000	0.000
5	0.076		0.697		1.922	
10	0.151	0.250	1.084	1.275	3.335	4.250
20	0.302	0.434	1.656	2.863	5.798	7.353
30	0.453	0.691	2.025	5.776	7.886	9.821
40	0.605	0.915		7.890	10.210	11.950
50	0.756	1.126	2.495	9.528	11.987	13.610
60	0.907	1.395		11.012	13.745	14.999
70	1.058	1.593		12.338	15.472	
80		1.850		13.793		
90		2.126		15.054		
100		2.356		16.197		

(1) From Tension Technology, Inc.
(2) High Molecular Weight Polyethylene; Sampson Ropes
(3) VETS 198 Rope; Whitehill Mfg.
(4) Double Braided; Sampson Ropes; Mean of 10 & 11 in. cir. Data “2-in-1 Stable Braid”
(5) Broken in line; from Tension Technology, Inc.
(6) Double Braided; Sampson Ropes; Mean of 7, 10 & 12 in cir. Data; “2-in-2 Super Strong”

Figure 6-2. Synthetic Line Stretch

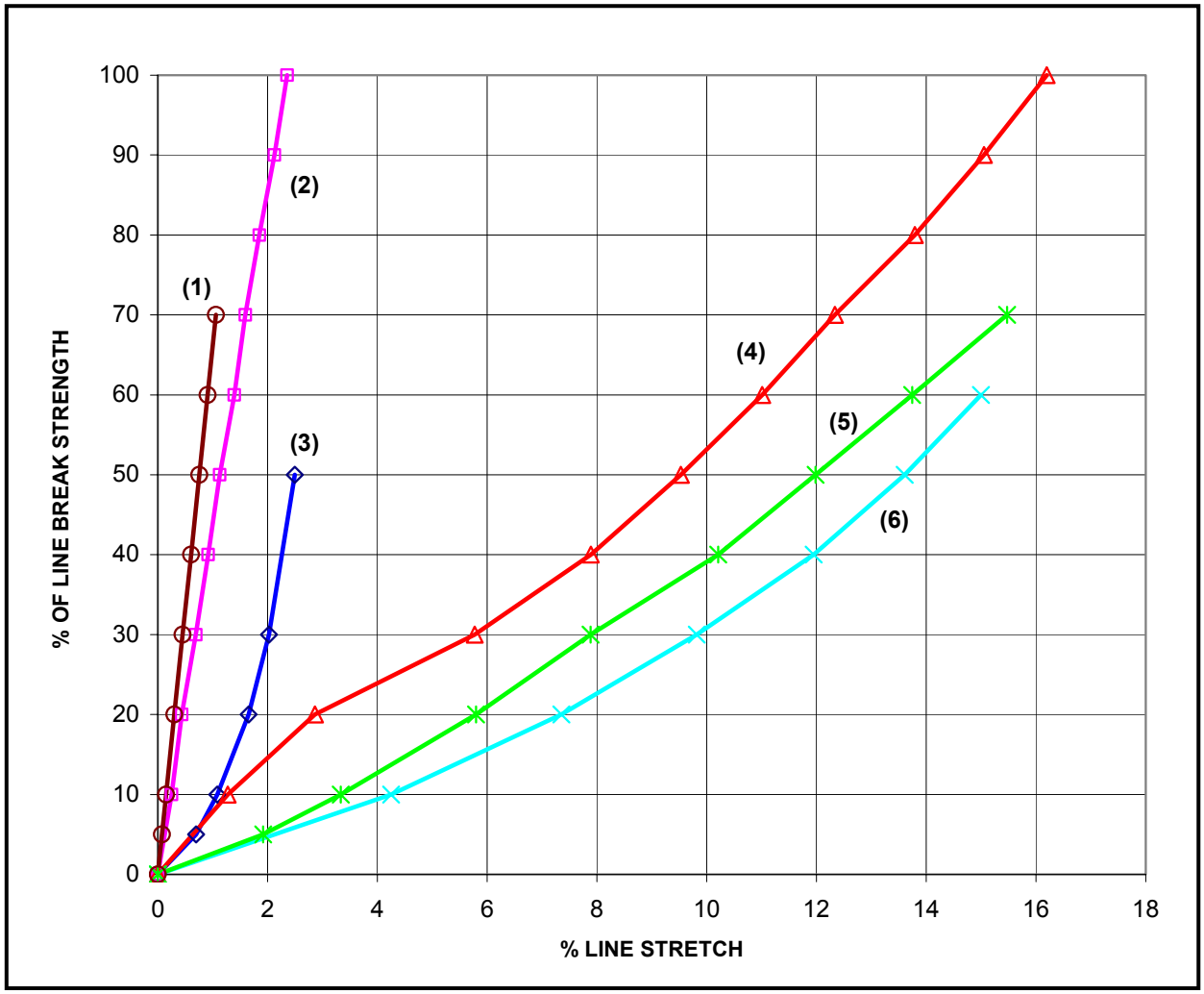

(1) From Tension Technology, Inc.
(2) High Molecular Weight Polyethylene; Sampson Ropes
(3) VETS 198 Rope; Whitehill Mfg.
(4) Double Braided; Sampson Ropes; Mean of 10 & 11 in. cir. Data "2-in-1 Stable Braid"
(5) Broken in line; from Tension Technology, Inc.
(6) Double Braided; Sampson Ropes; Mean of 7, 10 & 12 in cir. Data; "2-in-2 Super Strong"

Table 6-8. Double Braided Nylon Line*

		SINGLE LINE				THREE PARTS LINE			
DIA. (in)	CIR. (in)	Av Fb (kips)	Av Fb (E5 N)	AE (kips)	AE (E5 N)	Av Fb (kips)	Av Fb (E5 N)	AE (kips)	AE (E5 N)
1.0	3	33.6	1.495	118.9	5.29	100.8	4.48	356.8	15.87
1.1	3.5	45	2.002	159.3	7.09	135	6.01	477.9	21.26
1.2	3.75	52	2.313	184.1	8.19	156	6.94	552.2	24.56
1.3	4	59	2.624	208.8	9.29	177	7.87	626.5	27.87
1.4	4.5	74	3.292	261.9	11.65	222	9.88	785.8	34.96
1.6	5	91	4.048	322.1	14.33	273	12.14	966.4	42.99
1.8	5.5	110	4.893	417.0	17.32	330	14.68	1168.1	51.96
1.9	6	131	5.827	463.7	20.63	393	17.48	1391.2	61.88
2.1	6.5	153	6.806	541.6	24.09	459	20.42	1624.8	72.27
2.2	7	177	7.873	626.5	27.87	531	23.62	1879.6	83.61
2.4	7.5	202	8.985	715.0	31.81	606	26.96	2145.1	95.42
2.5	8	230	10.231	814.2	36.22	690	30.69	2442.5	108.65
2.7	8.5	257	11.432	909.7	40.47	771	34.30	2729.2	121.40
2.9	9	285	12.677	1008.8	44.88	855	38.03	3026.5	134.63
3.2	10	322	14.323	1139.8	50.70	966	42.97	3419.5	152.11
3.5	11	384	17.081	1359.3	60.46	1152	51.24	4077.9	181.39
3.8	12	451	20.061	1596.5	71.01	1353	60.18	4789.4	213.04
4.1	13	523	23.264	1851.3	82.35	1569	69.79	5554.0	247.05
4.5	14	599	26.645	2120.4	94.32	1797	79.93	6361.1	282.95
4.8	15	680	30.248	2407.1	107.07	2040	90.74	7221.2	321.22

*After Sampson, dry, cyclic loading; reduce nylon lines by 15% for wet conditions

Note: Dia. = diameter, Cir. = circumference, Av Fb = average break strength,
AE = cross-sectional area times modulus of elasticity (this does not include the highly nonlinear properties of nylon, shown in Figure 6-2)

Table 6-9. Double Braided Polyester Lines*

		SINGLE LINE				THREE PARTS LINE			
DIA. (in)	CIR. (in)	Av Fb (kips)	Av Fb (E5 N)	AE (kips)	AE (E5 N)	Av Fb (kips)	Av Fb (E5 N)	AE (kips)	AE (E5 N)
1.0	3	37.2	1.655	316.6	14.08	111.6	4.96	949.8	42.25
1.1	3.5	45.8	2.037	389.8	17.34	137.4	6.11	1169.4	52.02
1.2	3.75	54.4	2.420	463.0	20.59	163.2	7.26	1388.9	61.78
1.3	4	61.5	2.736	523.4	23.28	184.5	8.21	1570.2	69.85
1.4	4.5	71.3	3.172	606.8	26.99	213.9	9.51	1820.4	80.98
1.6	5	87.2	3.879	742.1	33.01	261.6	11.64	2226.4	99.03
1.8	5.5	104	4.626	885.1	39.37	312	13.88	2655.3	118.11
1.9	6	124	5.516	1055.3	46.94	372	16.55	3166.0	140.83
2.1	6.5	145	6.450	1234.0	54.89	435	19.35	3702.1	164.68
2.2	7	166	7.384	1412.8	62.84	498	22.15	4238.3	188.53
2.4	7.5	190	8.452	1617.0	71.93	570	25.35	4851.1	215.79
2.5	8	212	9.430	1804.3	80.26	636	28.29	5412.8	240.77
2.7	8.5	234	10.409	1991.5	88.59	702	31.23	5974.5	265.76
2.9	9	278	12.366	2366.0	105.24	834	37.10	7097.9	315.73
3.2	10	343	15.257	2919.1	129.85	1029	45.77	8757.4	389.55
3.5	11	407	18.104	3463.8	154.08	1221	54.31	10391.5	462.24
3.8	12	470	20.907	4000.0	177.93	1410	62.72	12000.0	533.79
4.1	13	533	23.709	4536.2	201.78	1599	71.13	13608.5	605.34
4.5	14	616	27.401	5242.6	233.20	1848	82.20	15727.7	699.60
4.8	15	698	31.049	5940.4	264.24	2094	93.15	17821.3	792.73

*After Sampson, dry, cyclic loading

Note: Dia. = diameter, Cir. = circumference, Av Fb = average break strength, AE = cross-sectional area times modulus of elasticity

Table 6-10. Some Factors to Consider When Specifying Synthetic Line or Wire Rope

PARAMETER
Safety
Break strength
Diameter
Weight
Buoyancy and hydrodynamic properties
Ease of handling
Equipment to be used
Stretch/strain properties
Load sharing between lines
Dynamic behavior
Reliability
Durability
Fatigue
Exposure
Chaffing/abrasion
Wet vs. dry condition
Experience
Ability to splice
Ability to provide terminations
Inspection
Cost
Availability

6-7.2 **Wire Ropes.** Wire rope is composed of three parts: wires, strands, and a core. The basic unit is the wire. A predetermined number of wires of the proper size are fabricated in a uniform geometric arrangement of definite pitch or lay to form a strand of the required diameter. The required number of strands are then laid together symmetrically around a core to form the rope. Refer to NAVSEA NSTM 613 for additional information. Some of the features to consider when specifying wire rope are listed in Table 6-10.

6-8 **Fenders.** Fendering is used between ships and compression structures, such as piers and wharves, in fixed moorings. Fenders act to distribute forces on ship hull(s) and minimize the potential for damage. Fendering is also used between moored ships. A wide variety of types of fenders are used including:

Wooden piles
Cylindrical marine fenders
Hard rubber fenders
Mooring dolphins
Specially designed structures
Composite fender piles
Plastic fender piles
Pre-stressed concrete fender piles

Camels are wider compression structures used, for example, to offset a ship from a pier or wharf.

The pressure exerted on ship hulls is a key factor to consider when specifying fenders. Allowable hull pressures on ships are discussed in NFESC TR-6015-OCN, *Foam-Filled Fender Design to Prevent Hull Damage*.

Behaviors of some common types of cylindrical marine fenders are shown in Figures 6-3 and 6-4.

Refer to MIL-HDBK-1025/1 and NAVSEA NSTM 611 for detailed information on fenders.

Figure 6-3. SEA-GUARD Fender Information

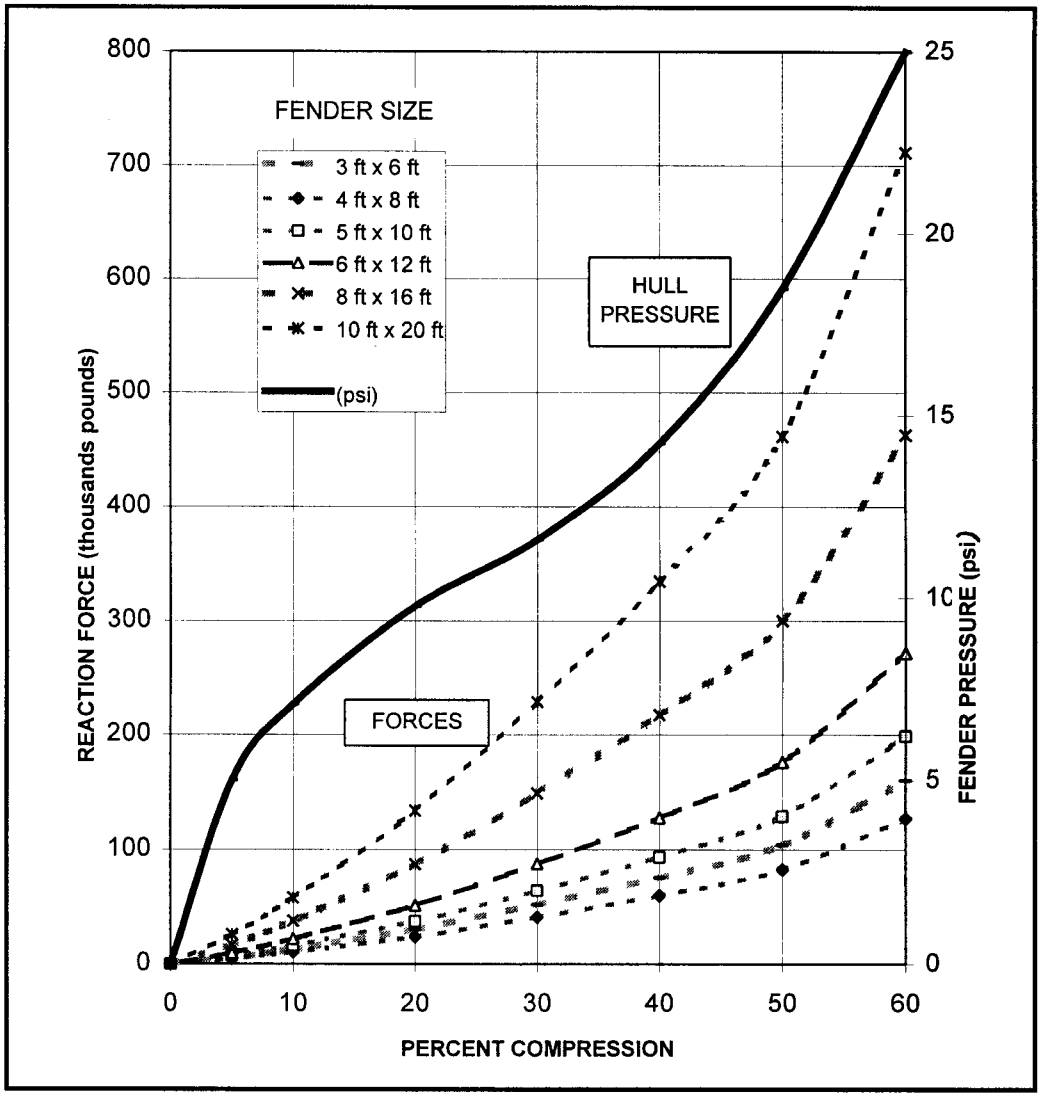

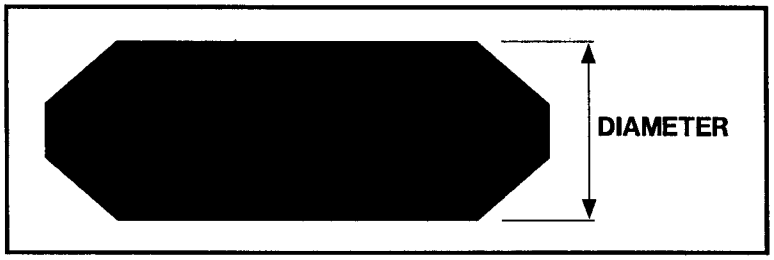

Figure 6-4. SEA-CUSHON Fender Performance

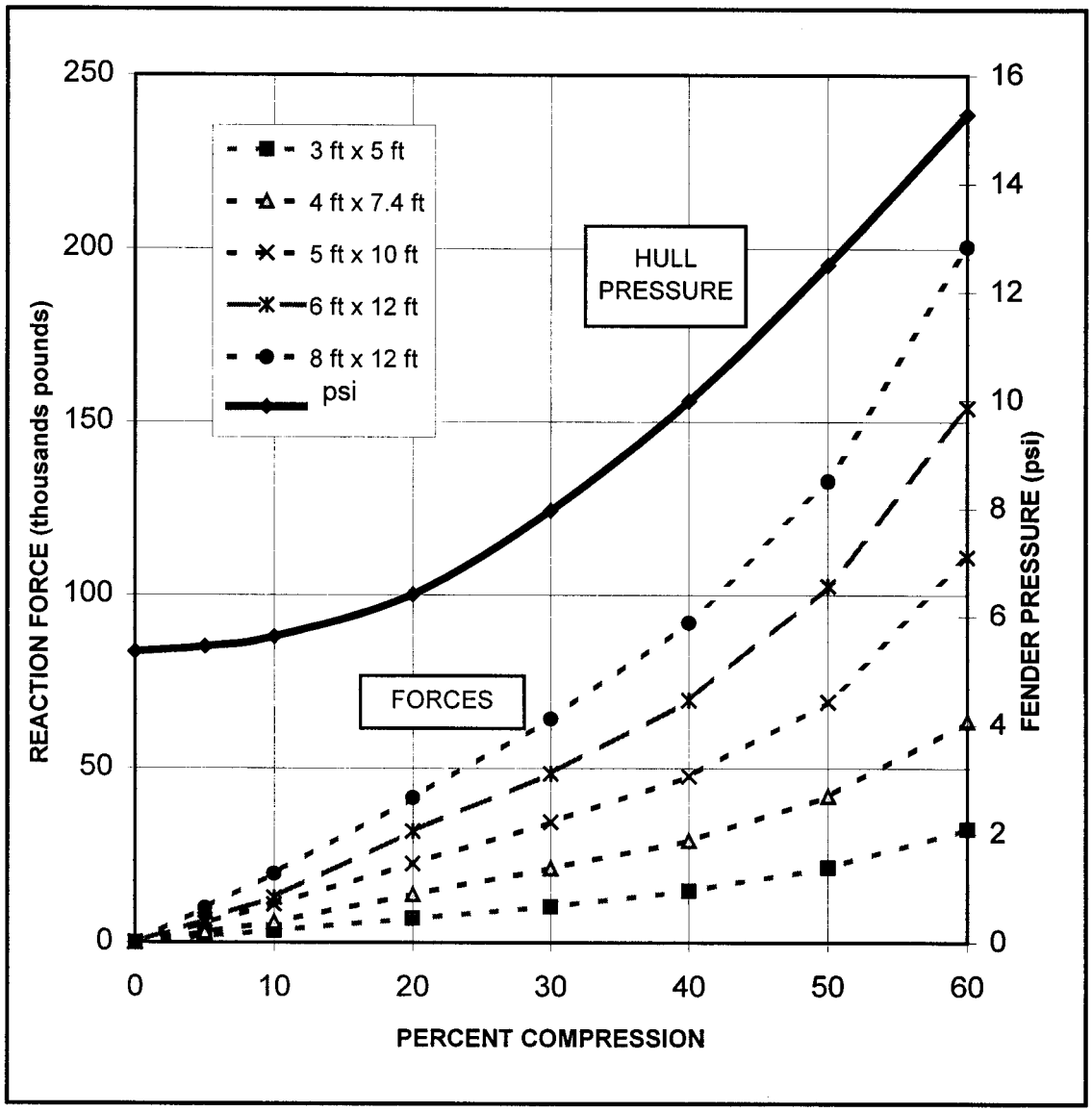

6-9 **PIER FITTINGS.** Standard pier and wharf mooring fittings, as shown in Figure 6-5, include:

Bollards
Bitts
Cleats

Cleats are not recommended for ships, unless absolutely necessary, because they are low capacity.

Some of the fittings commonly used on U.S. Navy piers are summarized in Table 6-11. Guidance for placing pier fittings in pier/wharf design is given in MIL-HDBK-1025/1.

Table 6-11. Commonly Used U.S. Navy Pier Mooring Fittings

DESCRIPTION	SIZE	BOLTS	WORKING CAPACITY (kips)
SPECIAL MOORING BOLLARD "A"	Height=48 in. Base 48x48 in.	12 x 2.75-in. dia.	Horz. = 660 @45 deg = 430 Nominal = 450
SPECIAL MOORING BOLLARD "B"	Height=44.5 in. Base 39x39 in.	8 x 2.25-in. dia.	Horz. = 270 @45 deg = 216 Nominal = 200
LARGE BOLLARD WITH HORN	Height=44.5 Base 39x39 in.	4 x 1.75-in. dia.	Horz. = 104 @45 deg = 66 Nominal = 70
LARGE DOUBLE BITT WITH LIP	Height=26 in. Base 73.5x28 in.	10 x 1.75-in. dia.	Nominal = 75*
LOW DOUBLE BITT WITH LIP	Height=18 in. Base 57.5x21.5 in.	10 x 1.625-in. dia.	Nominal = 60*
42-INCH CLEAT	Height=13 in. Base 26x14.25 in.	6 x 1.125-in. dia.	Nominal = 40
30-INCH CLEAT	Height=13 in. Base 16x16 in.	4 x 1.125-in. dia.	Nominal = 20

*Working capacity per barrel; after NAVFAC Drawing No. 1404464

It is recommended that all mooring fittings be clearly marked with their safe working capacities on a plate bolted or welded to the base of the mooring device. Additional information concerning the sizes and working capacities of pier and wharf mooring fittings is found in NFESC TR-6014-OCN, *Mooring Design Physical and Empirical Data* and in MIL-HDBK-1025/1. Also, NFESC assesses the condition of all mooring fittings during its routine pier/wharf inspections U.S. Navy waterfront facilities. Contact NFESC 55 (alex.viana@navy.mil orJason.bretzke@navy.mil) for inspection results and reports for specific U.S. Navy waterfront facilities.

Figure 6-5. Pier and Wharf Mooring Fittings Shown in Profile and Plan Views

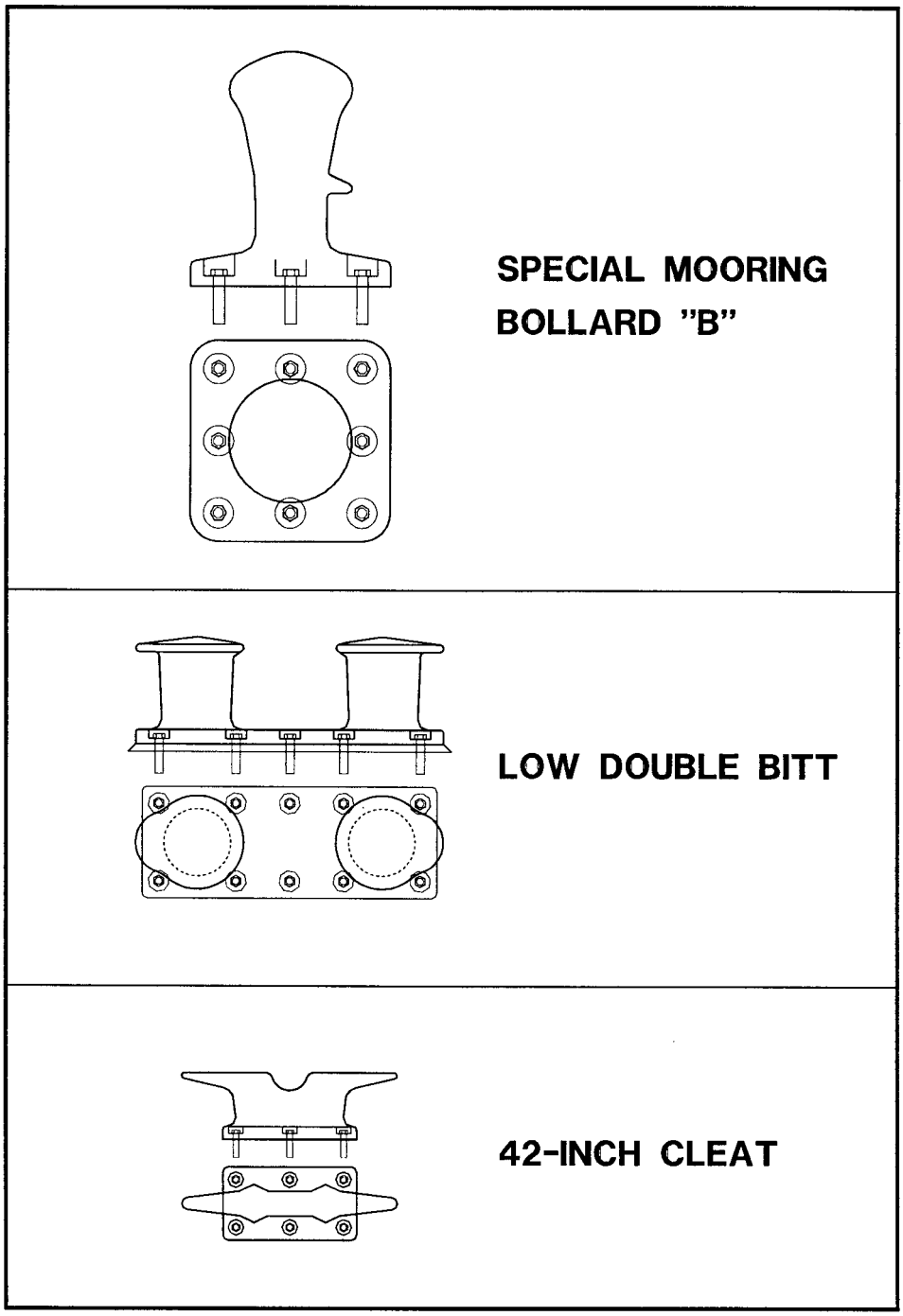

6-10 **CATENARY BEHAVIOR.** It is not desirable or practical to moor a ship rigidly. For example, a ship can have a large amount of buoyancy, so it usually must be allowed to move with changing water levels. Another problem with holding a ship too rigidly is that some of the natural periods of the ship/mooring system can become short, which may cause dynamic problems.

A ship can be considered a mass and the mooring system as springs. During mooring design, the behavior of the mooring 'springs' can be controlled to fine tune the ship/mooring system behavior to achieve a specified performance. This can be controlled by the weight of chain or other tension member, scope of chain, placement of sinkers, amount the anchor penetrates the soil, and other parameters. The static behavior of catenaries can be modeled using the computer program CSAP2 (NFESC CR-6108-OCN, *Anchor Mooring Line Computer Program Final Report, User's Manual for Program CSAP2*). This program includes the effects of chain and wire rope interaction with soils, as well as the behavior of the catenary in the water column and above the water surface.

As an example, take the catenary shown in Figure 6-6. This mooring leg consists of four sections. The segment next to the anchor, Segment 1, consists of wire rope, followed by three segments of chain. Sinkers with the shown in-water weight are located at the ends of Segments 2 and 3. In this example, a plate anchor is driven 55 feet (16.8 meters) into mud below the seafloor. The chain attachment point to the ship is 64 feet (19.5 meters) above the seafloor. The mooring leg is loaded to its design horizontal load of H = 195 kips (8.7 E5 newtons) to key and proof load the anchor soon after the anchor is installed. The keying and proofing corresponds to a tension in the top of the chain of approximately 210 kips. Figure 6-6 shows the shape of the chain catenary predicted by CSAP2 for the design load.

The computed load/deflection curve for the design water level for this mooring leg, after proofing, is shown in Figure 6-7. The shape of this and the other mooring legs in this mooring, which are not shown, will strongly influence the static and dynamic behavior of the ship/mooring system during forcing.

Figure 6-6. Sample Catenary

SEGMENT	TYPE	DIA	WEIGHT	LENGTH	SINKER
		(inches)	(lbf/ft)	(ft)	(kips)
1	W	3.00	13.15	30	0
2	C	2.75	62.25	156	13.35
3	C	2.75	62.25	15	17.8
4	C	2.75	62.25	113	0

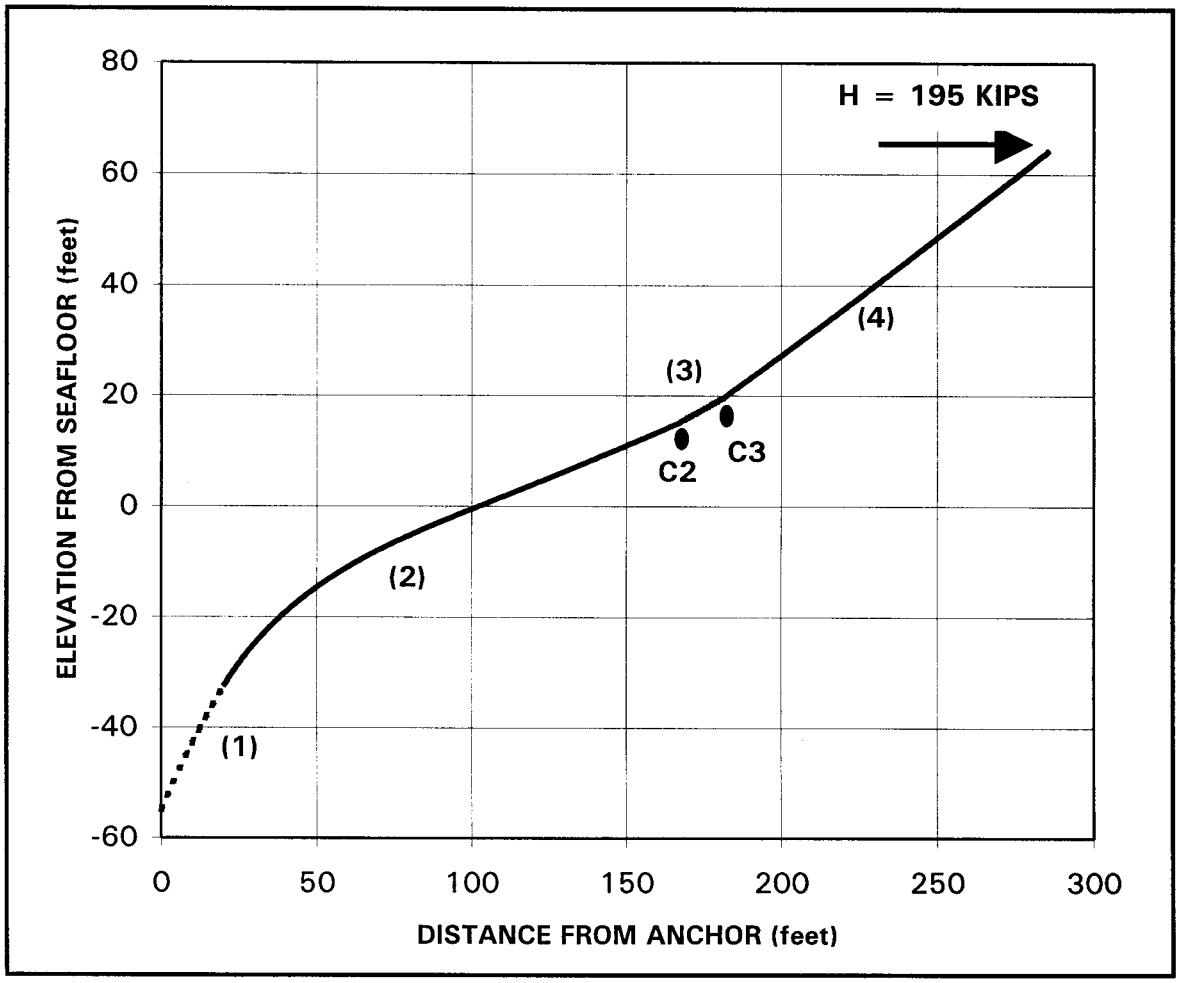

Figure 6-7. Load/Deflection Curve for the Example Mooring Leg

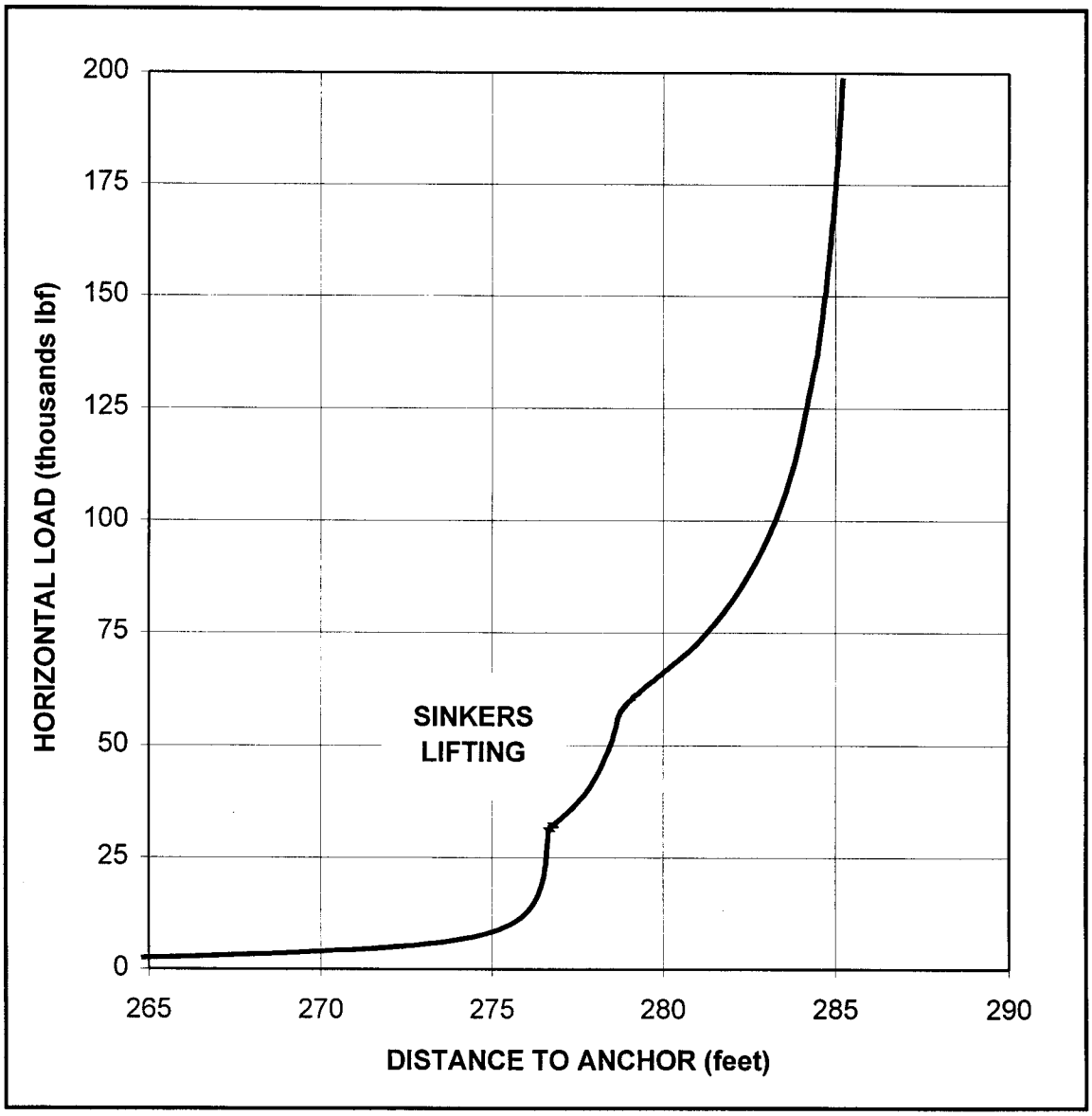

6-11 **SOURCES OF INFORMATION.** Detailed NAVFAC information, including drawings, specifications, and manuals, is available in the National Institute of Building Sciences, "Construction Criteria Base." Further information can be obtained from the Naval Facilities Engineering Command Criteria Office and the NFESC Moorings Center of Expertise. A list of sources for information on facility mooring equipment is provided in Table 6-12.

Table 6-12. Sources of Information for Facility Mooring Equipment

ITEM	SOURCE
Standard fittings for waterfront structures	NAVFAC Drawing No. 1404464
Marine fenders	UFGS 02395 "Prestressed Concrete Fender Piling" UFGS 02396 "Resilient Foam-Filled Marine Fenders" UFGS 02397 "Arch-Type Rubber Marine Fenders"
Camels	MIL-C-28628C(YD) "Camel, Wood, Marine; Single Log Configuration, Untreated" "Standard Aircraft Carrier Mooring Camel" NAVFAC Drawings SD-1404045A to 52 and NAVFAC Standard Spec. C39 "Standard Submarine Mooring Camel" NAVFAC Drawings SD-1404943 to 47 and NAVFAC Spec. C46 "Standard Attack Submarine Mooring Camel" NAVFAC Drawings SD-1404667 to 70 and NAVFAC Standard Spec. C49
Mooring lines	Cordage Institute Technical Manual
Foam buoys	NFESC purchase descriptions of Mar. 1988, Dec. 1989 and May 1990.
Stud link chain and fittings	NFESC purchase description of Mar. 1995.
NAVMOOR anchors	NFESC purchase description of Nov. 1985 and drawing package of July 1990.
Stud link chain anodes	NFESC purchase description of June 1990.

This page intentionally left blank

CHAPTER 7

VESSEL MOORING EQUIPMENT GUIDELINES

7-1 **INTRODUCTION.** A vessel must be provided with adequate mooring equipment to meet its operational and design requirements. This equipment enables the ship to anchor in a typical soil under design environmental conditions. In addition, the ship can moor to various piers, wharfs, fleet moorings, and other facilities. Equipment on board the ship must be designed for Mooring Service Types I, II and III, as discussed in Chapter 3-1. Additional mooring hardware, such as specialized padeyes, mooring chains, wire ropes, and lines, can be added for Mooring Service Type IV situations.

7-2 **TYPES OF MOORING EQUIPMENT.** Basic shipboard mooring equipment is summarized in Table 7-1. Additional information is provided in NAVSEA NSTM Chapters 581, 582, 611 and 613; from Naval Sea Systems Command drawings and publications; Cordage Institute, *Cordage Institute Technical Manual*; *Guidelines for Deepwater Port Single Point Mooring Design*, Flory et al. (1977); *The Choice Between Nylon and Polyester for Large Marine Ropes*, Flory et al. (1988); *A Method of Predicting Rope Life and Residual Strength*, Flory et al. (1989); *Fiber Ropes for Ocean Engineering in the 21st Century*, Flory et al, (1992a); *Failure Probability Analysis Techniques for Long Mooring Lines*, Flory et al. (1992b); *Modeling the Long-Term Fatigue Performance of Fibre Ropes*, Hearle et al. (1993); Oil Companies International Marine Forum (OCIMF), *Mooring Equipment Guidelines* (1992); OCIMF *Recommendations for Equipment Employed in the Mooring of Ships at Single Point Moorings* (1993); OCIMF *Prediction of Wind and Current Loads on VLCCs* (1994); OCIMF *Single Point Mooring Maintenance and Operations Guide* (1995); and *Fatigue of SPM Mooring Hawsers*, Parsey (1982).

7-3 **EQUIPMENT SPECIFICATION.** Whenever possible, standard equipment is used on board ships as mooring equipment. The specification, size, number, and location of the equipment is selected to safely moor the ship. Some of the many factors that need to be considered in equipment specification are weight, room required, interaction with other systems, power requirements, reliability, maintenance, inspection, and cost.

7-4 **FIXED BITTS.** Bitts provide a termination for tension members. Fixed bitts, Figure 7-1, are typically placed in pairs within a short distance forward or aft of a chock location. They are often placed symmetrically on both the port and starboard sides, so that the ship can moor to port or starboard. Capacities of the bitts are based on their nominal diameter. Table 7-2 provides fixed bitt sizes with their associated capacities. NFESC TR-6047-OCN "The Capacity and Use of Surface Ships' Double Bitts" (in preparation) provides additional information on ship's bitts. The basic philosophy for bitts use is that mooring lines should part well below the structural yield of the double bits in Mooring Service Types I and II to minimize the chance that ship's mooring fittings need to be repaired. In Mooring Service Type III 'Heavy Weather Mooring' is to keep the ship moored as safely as possible, so the working capacities of the mooring lines can approximately equal the working capacities of the ship's double bitts.

7-5 **RECESSED SHELL BITTS.** Recessed shell bitts, Figure 7-2, are inset into ships' hulls well above the waterline. These bitts are used to moor lighterage or harbor craft alongside. They also assist in mooring at facilities. The NAVSEA shell bitt has a total working capacity of 92 kips (4.27 E5 newtons) with two lines of 46 kips maximum tension each.

7-6 **EXTERIOR SHELL BITTS.** Aircraft carriers have exterior shell bitts, Drawing No. 600-6601101, that are statically proof loaded to 184 kips (8.2 E5 newtons). This proof load is applied 11 inches (280 mm) above the base. This testing is described in the Newport News Shipbuilding testing report for USS HARRY S TRUMAN *Bitts, Chocks and Mooring Rings.*

7-7 **CHOCKS.** There are many types of chocks, such as closed chocks, Panama chocks, roller chocks, and mooring rings. Closed clocks are often used and characteristics of these fittings are shown in Table 7-3.

7-8 **ALLOWABLE HULL PRESSURES.** As a ship berths or when it is moored, forces may be exerted by structures, such as fenders, camels, and dolphins, on the ship hull. NFESC TR-6015-OCN, *Foam-Filled Fender Design to Prevent Hull Damage* provides a rational design criteria to prevent yielding of vessel hull plating.

7-9 **SOURCES OF INFORMATION FOR SHIPS' MOORING EQUIPMENT.** Additional information is available from the Naval Sea Systems Command (NAVSEA 03P), NSWCCD-SSES, Military Sealift Command (MSC), and the U.S. Coast Guard (USCG). Table 7-4 provides a list of selected referenced materials.

Table 7-1. Types of Ship Based Mooring Equipment*

EQUIPMENT	DESCRIPTION
Drag embedment anchors	One or more anchors required. See Chapter 7 for anchor information.
Anchor chain	Stud link grade 3 chain (see Chapter 6.4) is used.
Anchor windlass/wildcat and associated equipment	Equipment for deploying and recovering the anchor(s), including the windlass(s), hawse pipe(s), chain stoppers, chain locker, and other equipment.
Bitts	Bitts for securing mooring lines.
Chocks, mooring rings and fairleads	Fittings through which mooring lines are passed.
Padeyes	Padeyes are provided for specialized mooring requirements and towing.
Mooring lines	Synthetic lines for mooring at piers, wharfs, and other structures. See Chapter 6.7 for information.
Capstans	Mechanical winches used to aid in handling mooring lines.
Wire ropes	Wire rope is sometimes used for mooring tension members.
Fenders	Marine fenders, as discussed in Chapter 6.8, are sometimes carried on board.
Winches	Winches of various types can support mooring operations. Some ships use constant tension winches with wire rope automatically paid out/pulled in to adjust to water level changes and varying environmental conditions. Fixed-length synthetic spring lines are used in pier/wharf moorings that employ constant tension winches to keep the ship from 'walking' down the pier.
Other	Various specialized equipment is carried to meet needs (such as submarines).

*See NAVSEASYSCOM Naval Ships' Technical Manual for additional information and Chapter 3.1 for design criteria.

Figure 7-1. Ship's Fixed Double Bitts

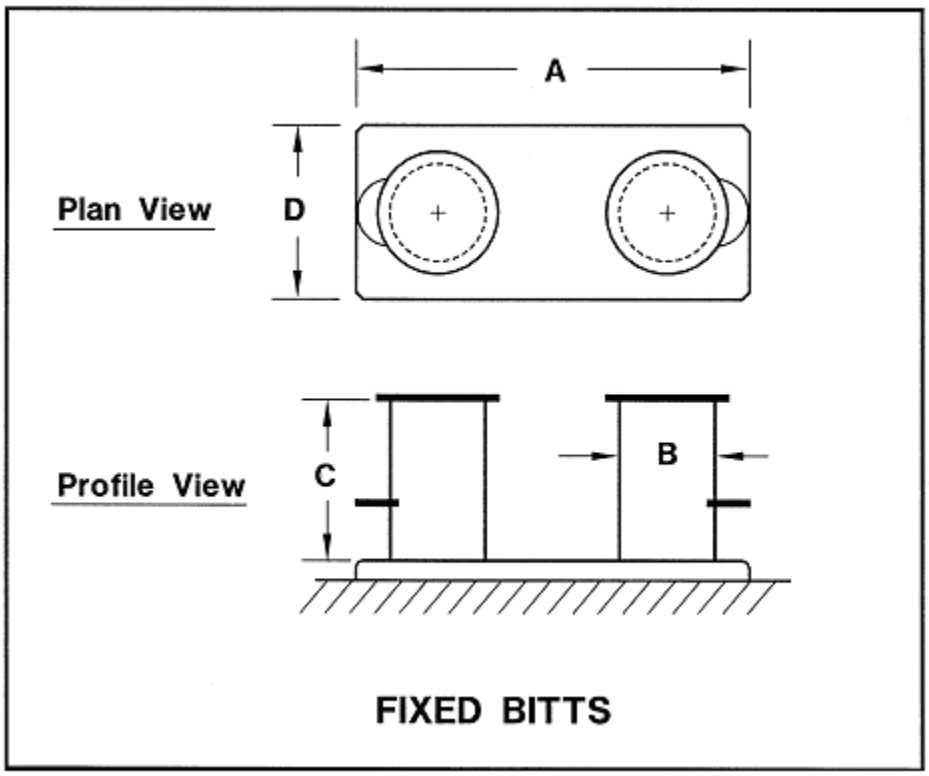

Table 7-2. Fixed Ships' Bitts (minimum strength requirements)*

NAVSEA FIXED BITTS (after 804-1843362 REV B OF 1987)

NOMINAL SIZE (inches)	4	8	10	12	14	18
MAX. LINE CIR. (inches)	3	5	6.5	8	10	12
MAX. LINE DIA. (inches)	1.0	1.6	2.1	2.5	3.2	3.8
MAX. MOMENT (lbf-in x 1000)	134	475	1046	1901	3601	6672
*MAX. CAPACITY (lbf x 1000)**	26.8	73.08	123.1	181	277	417
A - BASE LENGTH (inches)	16.5	28.63	36.75	44.25	52.5	64
B - BARREL DIA. (inches)	4.5	8.625	10.75	12.75	14	18
C - BARREL HT. (inches)	10	13	17	21	26	32
D - BASE WIDTH (inches)	7.5	13.63	17.25	20.25	22.5	28
MAX. LINE CIR. (mm)	76	127	165	203	254	305
*MAX. CAPACITY (newton x 100000)**	1.19	3.25	5.47	8.05	12.32	18.55
A - BASE LENGTH (inches)	419	727	933	1124	1334	1626
B - BARREL DIA. (inches)	114	219	273	324	356	457
C - BARREL HT. (inches)	254	330	432	533	660	813
D - BASE WIDTH (inches)	191	346	438	514	572	711

* force applied at half the barrel height

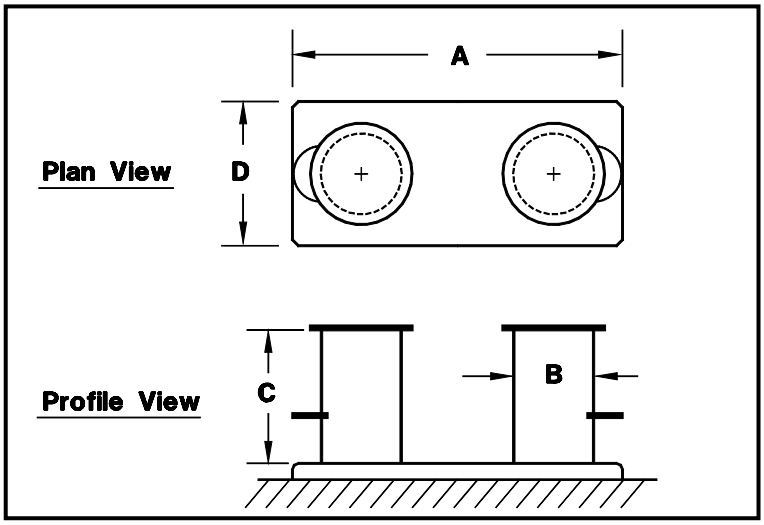

*Note that the design of these bitts has changed over the years, so different classes of ships may have different designs. The way the bitts are used may also influence their working capacity. Contact NAVSEASYSCOM for additional information.

Figure 7-2. Recessed Shell Bitt (minimum strength requirements)

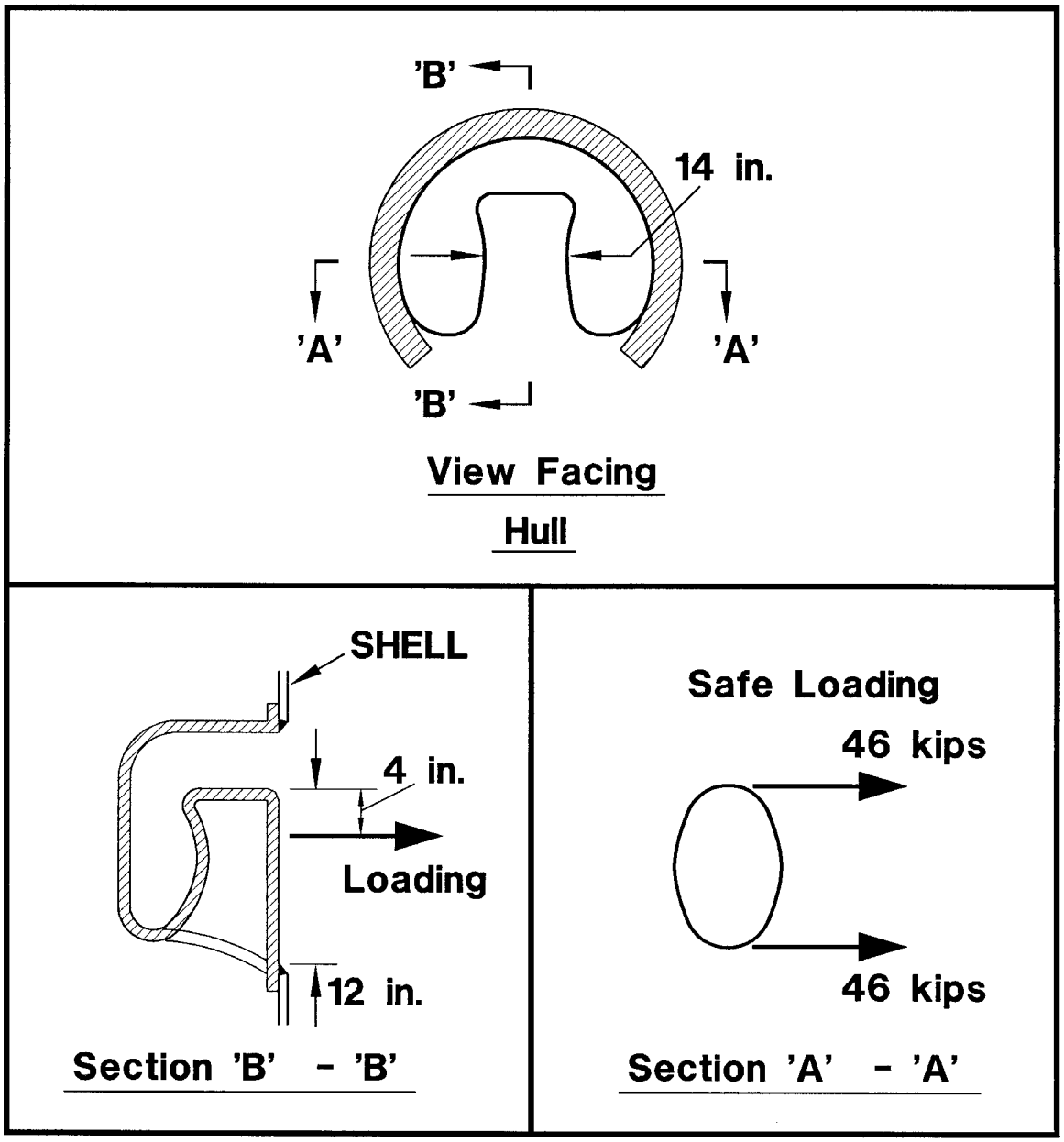

Table 7-3. Closed Chocks (minimum strength requirements)

NAVSEA CLOSED CHOCKS (from Drawing 804-1843363)

CHOCK SIZE (inches)	6	10	13	16	20	24
MAX. LINE CIR. (inches)	3	5	6.5	8	10	12
LINE BREAK (lbf x 1000)	26.8	73	123	181	277	417
A - HOLE WIDTH (inches)	6	10	13	16	20	24
B - HOLE HEIGHT (inches)	3	5	6.5	8	10	12
C - HEIGHT (inches)	8.5	11.25	13.88	16.75	25.75	25.25
D - BASE THICKNESS (inches)	5.25	6.5	7.5	9	16	13.5
E - LENGTH (inches)	13	19	23	28	38.75	40
MAX. LINE CIR. (mm)	76	127	165	203	254	305
LINE BREAK (newton x 100000)	1.19	3.25	5.47	8.05	12.32	18.55
A - HOLE WIDTH (mm)	152	254	330	406	508	610
B - HOLE HEIGHT (mm)	76	127	165	203	254	305
C - HEIGHT (mm)	216	286	352	425	654	641
D - BASE THICKNESS (mm)	133	165	191	229	406	343
E - LENGTH (mm)	330	483	584	711	984	1016

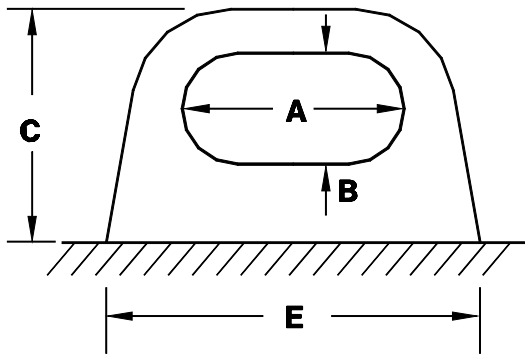

Note: D = thickness at the base

Table 7-4. Sources of Information for Ships' Mooring Equipment

ITEM	SOURCE
Information on existing U.S. Navy ships, drawings, and mooring hardware	Ships Characteristics Database (WATERS TOOLBOX)
General ship information	NAVSEA *Hitchhikers Guide to Navy Surface Ships*
Chocks	NAVSEA Drawing No. 804-1843363 & S1201-921623 (Roller Chock)
Panama chocks	NAVSEA Drawing No. 804-1843363
Fixed bitts	NAVSEA Drawing No. 804-1843362
Recessed shell bitts	NAVSEA Drawing No. 805-1841948
Exterior shell bitts	Newport News Shipbuilding Drawing No. 600-6601101
Cleats	NAVSEA Drawing No. 804-2276338
Capstans/gypsy heads	NAVSEA Drawing No. S260-860303 & MIL-C-17944
Hawser reels	NAVSEA Drawing No. S2604-921841 & 42
Mooring lines	*Cordage Institute Technical Manual*

*Contact NSWCCD-SSES Code 9732 at FriesJl@nswccd.navy.mil for drawings and additional information on ship's mooring equipment.

CHAPTER 8

EXAMPLE PROBLEMS

8-1 **INTRODUCTION.** The design of mooring systems is illustrated through the use of several examples in this section. The emphasis of this UFC is on statics, so static results are shown. However, the marine environment can be dynamic, so dynamic effects are illustrated in the examples.

8-2 **SINGLE POINT MOORING - BASIC APPROACH.** Design of single point fleet moorings (SPMs) is illustrated here.

Let us first assume that the wind is coming from a specified direction and has stationary statistical properties. The current speed and direction are constant. In this case there are three common types of ship behavior, shown in Figure 8-1, that a vessel at a single point mooring can have:

a) Quasi-static. In this case the ship remains in approximately a fixed position with the forces and moments acting on the ship in balance. For quasi-static behavior, the tension in the attachment from the ship to mooring will remain approximately constant. Quasi-static analyses can be used for design in this case.

b) Fishtailing. In this case the ship undergoes significant surge, sway, and yaw with the ship center of gravity following a butterfly-shaped pattern. The mooring can experience high dynamic loads, even though the wind and current are constant.

c) Horsing. In this case the ship undergoes significant surge and sway with the ship center of gravity following a U-shaped pattern. The mooring can experience high dynamic loads.

Figure 8-1. Some Types of Behavior of Ships at Single Point Moorings

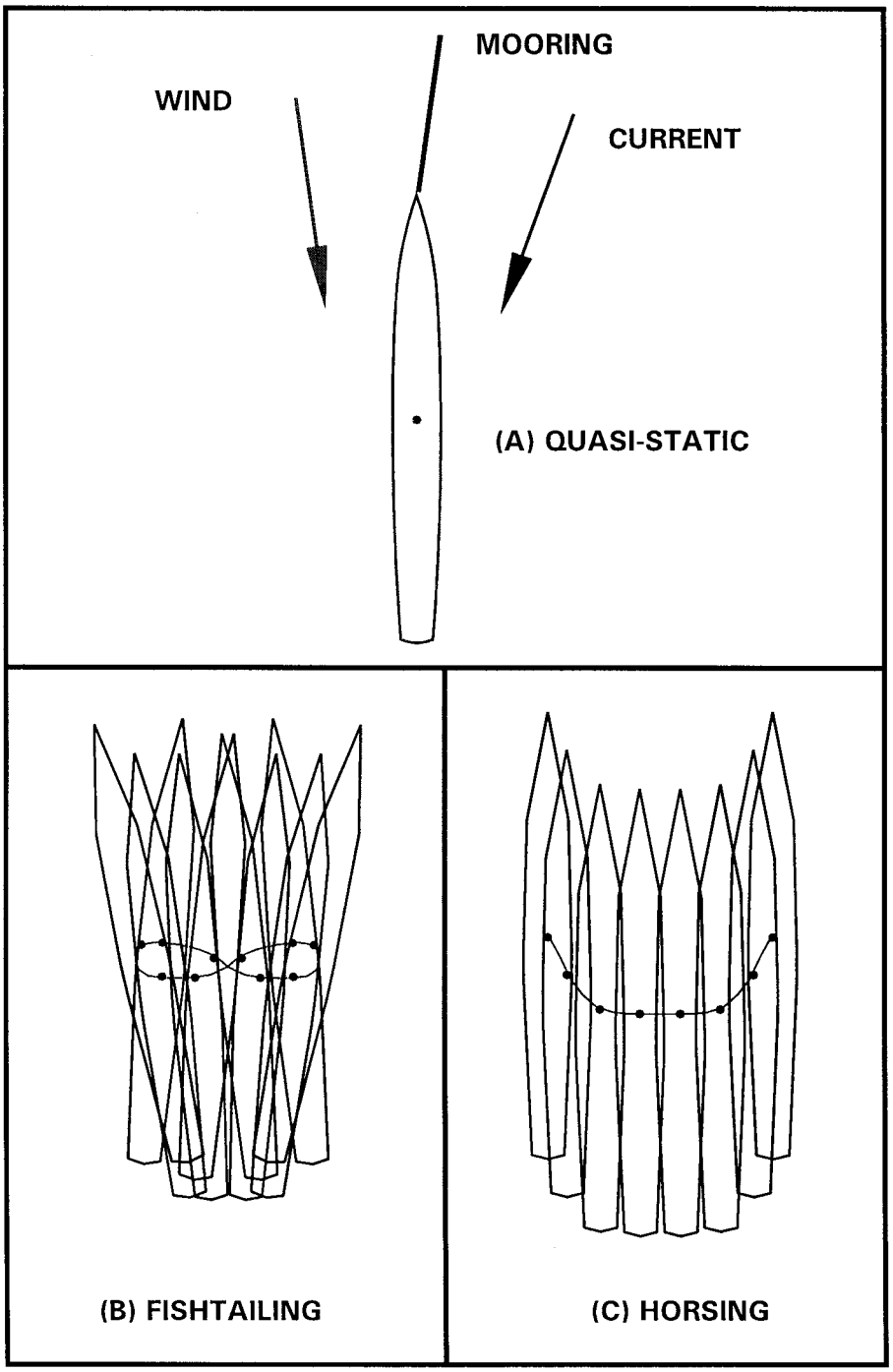

These cases show that the type of behavior of a given ship at a given single point mooring in a given environment can be very complex (Wichers, 1988), even though the wind and current are steady. It is recommended that a dynamic stability analysis first be conducted (Wichers, 1988) at the early stages of single point mooring design. Then the type of analysis required can be determined. The results from this analysis will suggest what type of method should be used to design a single point mooring. These methods are complex and beyond the scope of this UFC. Behavior of single point moorings is illustrated by example.

8-2.1 **Background for Example.** In this example two moorings were designed and installed. The original designs were based on quasi-static methods. Ships moored to these buoys broke their mooring hawsers when a wind gust front struck the ships. In this example, the design and hawser failures are reviewed. The effects of wind dynamics on a single point mooring are illustrated.

8-2.2 **Ship.** A single 2nd LT JOHN P. BOBO (T-AK 3008) class ship was moored at each of two fleet mooring buoys. Table 8-1 gives basic characteristics of the ship.

Table 8-1. 2nd LT JOHN P BOBO Parameters (Fully Loaded)

PARAMETER	DESIGN BASIS (SI units)	DESIGN BASIS (English units)
Length		
Overall	193.2 m	633.76 ft
At Waterline	187.3 m	614.58 ft
Between Perpendiculars	187.3 m	614.58 ft
Beam @ Waterline	9.80	32.15 ft
Draft	9.75 m	32 ft
Displacement	4.69E7 kg	46111 long tons
Line Size (2 nylon hawsers)	-	12 inches

8-2.3 **Forces/Moments.** In this case the design wind speed is 45 knots (23 m/s). Currents, waves, and tidal effects are neglected for these 'fair weather' moorings. The bow-on ship wind drag coefficient is taken as the value given for normal ships of 0.7, plus 0.1 is added for a clutter deck to give a drag coefficient of 0.8. Methods in Section 4 are used to compute the forces and moments on the ship. The computed bow-on wind force is 68.6 kips (3.0 E5 newtons) for 45-knot (23-m/s) winds, as shown in Figure 8-2 .

8-2.4 **Quasi-Static Design.** Quasi-static design procedures place the ship parallel to the wind for this example, because in this position the forces and moments on the ship are balanced out. Two mooring hawsers were specified for this design. Extra factor of safety was specified for the two 12-inch nylon mooring hawsers, which had a new wet breaking strength of 406 kips (1.8 E6 newtons), to account for poor load sharing between the two hawsers.

8-2.5 **Mooring Hawser Break.** The ships were moored and faced into 15-knot winds. The weather was unsettled, due to two nearby typhoons, so the ships had their engines in idle. A wind gust front struck very quickly with a wind speed increase from 15 to 50 knots. As the wind speed increased, the wind direction changed 90 degrees, so the higher wind speed hit the ships broadside. The predicted peak dynamic tension on the mooring hawsers was 1140 kips (5.07 E6 newtons), (Seelig and Headland, 1998). Figure 8-3 is a simulation predicting the dynamic behavior of the moored ship and hawser tension. In this case, the mooring hawsers broke and the predicted factor of safety dropped to less than 1. In this event, the peak dynamic tension on the mooring hawser is predicted to be 13.5 times the bow-on wind force for 50-knot (25.7-m/s) winds.

This example shows that single point moorings can be susceptible to dynamics effects, such as those caused by wind gust fronts or other effects.

Figure 8-2. Example Single Point Mooring

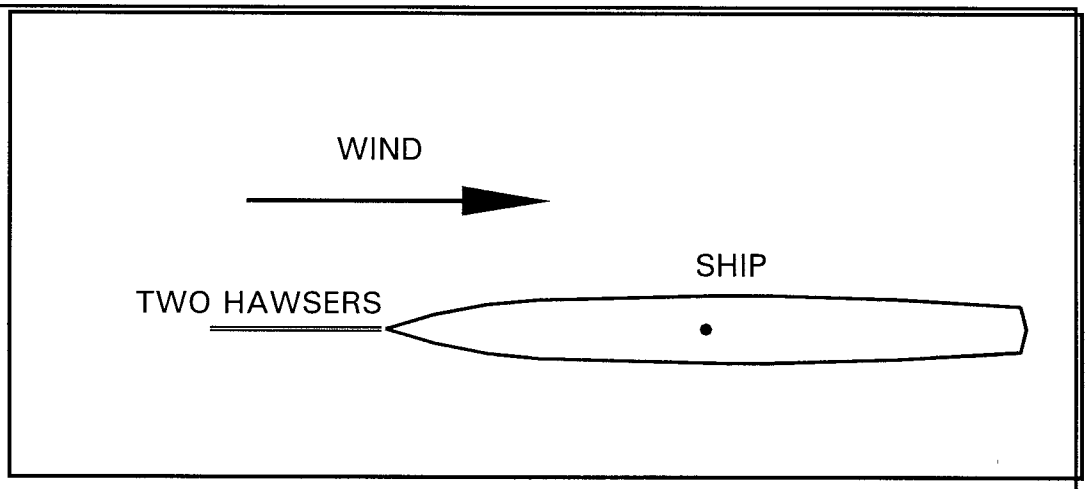

CONDITION	*BOW-ON SHIP WIND LOAD*	*F.S. FOR 1 HAWSER*	*F.S. FOR 2 HAWSERS*
45-KNOT WIND	68.5 KIPS	5.9	11.9
50-KNOT WIND	84.5 KIPS	4.8	9.6

Figure 8-3. Example Mooring Failure Due to a Wind Gust Front

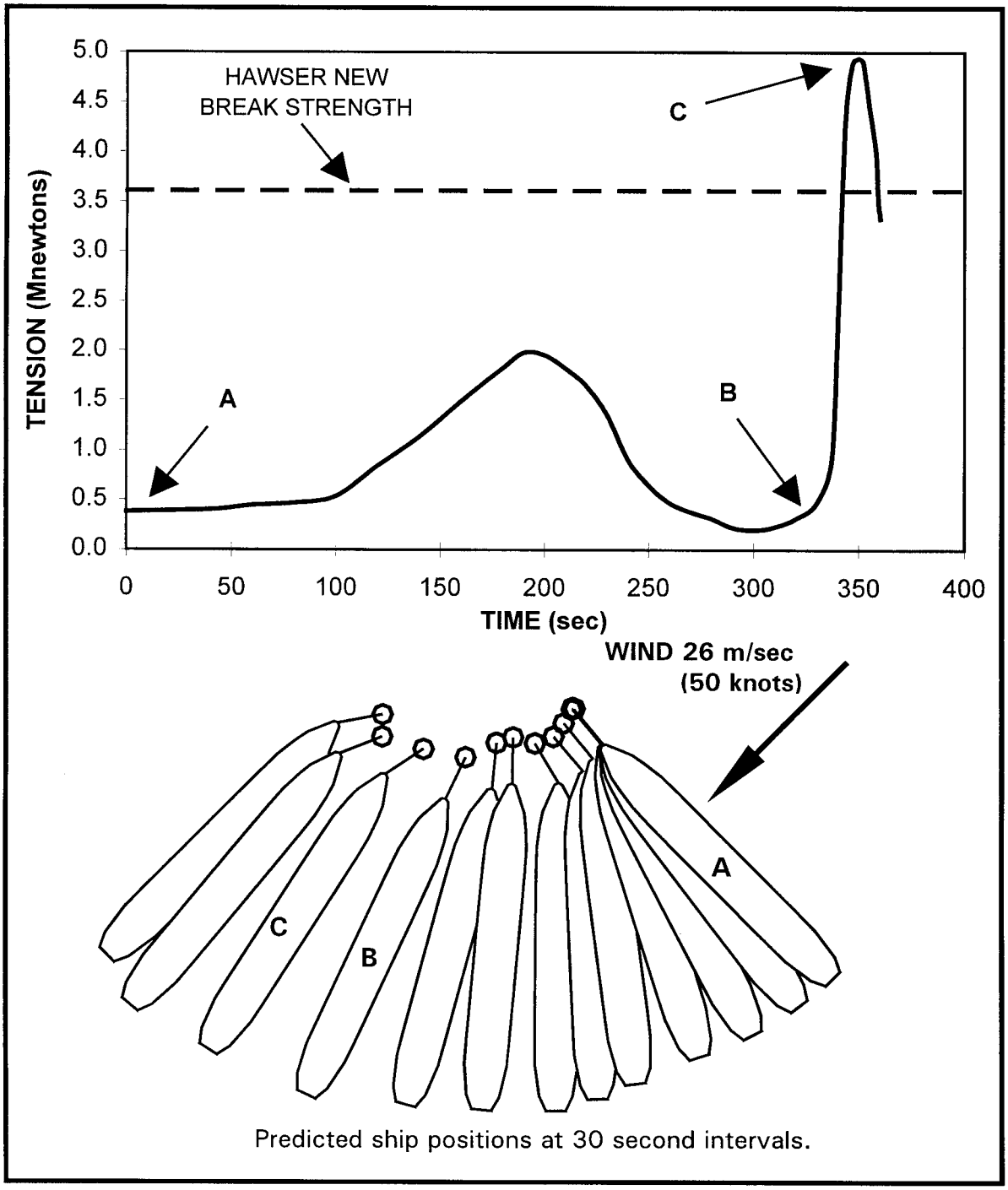

8-3 **FIXED MOORING - BASIC APPROACH.** Development of a design concept for a fixed mooring, a mooring that includes both tension and compression members, is illustrated here.

8-3.1 **Background.** Several new aircraft carrier berthing wharf facilities are being programmed. Users expressed concerns regarding the possibility of excessive ship movement. Wind is the major environmental parameter of concern. Assume the proposed sites have small tidal ranges and tidal currents.

8-3.2 **Goal.** Develop a concept to moor USS NIMITZ (CVN-68) class ships at newly constructed wharves. Assume the Mooring Service Type is II and the design wind speed is 75 mph (33.5 m/s).

8-3.3 **Ship.** Fully loaded USS NIMITZ (CVN-68) class ships are used in this example. Table 8-2 gives some ship parameters. Additional information is found in the Ships Characteristics Database (WATERS TOOLBOX).

Table 8-2. CVN-68 Criteria (Fully Loaded)

PARAMETER	DESIGN BASIS (SI units)	DESIGN BASIS (English units)
Length Overall At Waterline	 332.8 m 317.0 m	 1092 ft 1040 ft
Beam @ Waterline	40.8	134 ft
Draft	11.55 m	37.91 ft
Displacement	9.317 kg	91,700 long tons
Bitt Size	-	12 inches
Line Size (nylon)	-	8 and 9 inches

8-3.4 **Forces/Moments.** Methods in Section 4 are used to compute the forces and moments on the ship. These values are summarized in Figure 8-4.

8-3.5 **Definitions.** In this example we define a global coordinate system with "X" parallel to the wharf, as shown in Figure 8-5. Then "Y" is a distance perpendicular to the wharf in a seaward direction and "Z" is a vertical distance. Let "Pt 2" be the ship chock coordinate and "Pt 1" be the pier fitting. A spring line is defined as a line whose angle in the horizontal plane is less than 45 degrees and a breasting line whose angle in the horizontal plane is greater than or equal to 45 degrees, as shown in Figure 8-5.

8-3.6 **Preliminary Analysis.** The first step for fixed mooring design is to analyze the mooring requirements for the optimum ideal mooring shown in Figure 8-6. Analyzing the optimum ideal arrangement is recommended because: (1) calculations can be performed by hand and; (2) this simple arrangement can be used as a standard to evaluate other fixed mooring configurations (NFESC TR-6005-OCN, *EMOOR - A Quick and Easy Method for Evaluating Ship Mooring at Piers and Wharves.*

The optimum ideal mooring shown in Figure 8-6 consists of two spring lines, Lines 1 and 4, which are assumed to resist longitudinal forces. There are two breast lines, Lines 2 and 3, which are assumed to resist lateral forces and moments for winds with directions from 0 to 180 degrees. Fenders are not shown. All lines are assumed to be parallel to the water surface in the ideal mooring.

A free body diagram is made of the optimum ideal mooring for a loaded CVN-68 in 75-mph (33.5-m/s) winds. It is found that the sum of the working mooring capacity required for Lines 1 and 4 is 174 kips (7.7 E5 newtons) and the sum of the working mooring capacity required for Lines 2 and 3 is 1069 kips (4.76 E5 newtons), as shown in Figure 8-7. Note that no working line capacity is required in the 'Z' direction, because the ship's buoyancy supports the ship. The sum of all the mooring line working capacities for the optimum ideal mooring is 1243 kips (5.53 E6 newtons).

Figure 8-4. Wind Forces and Moments on a Single Loaded CVN-68 for a 75-mph (33.5-m/s) Wind

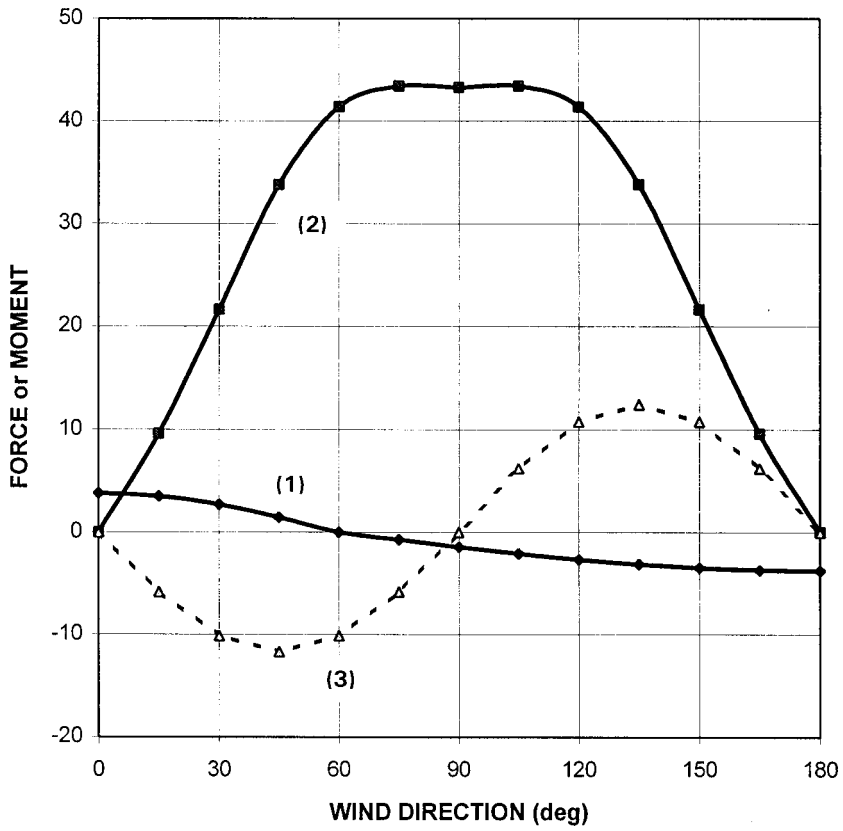

PARAMETER	*CURVE*	*GRAPH UNITS*	*MAX. VALUE*
F_{xw}	(1)	E5 N	84.6 kips
F_{yw}	(2)	E5 N	975.5 kips
M_{xyw}	(3)	E7 N-m	91421 kip-ft

Figure 8-5. Definitions

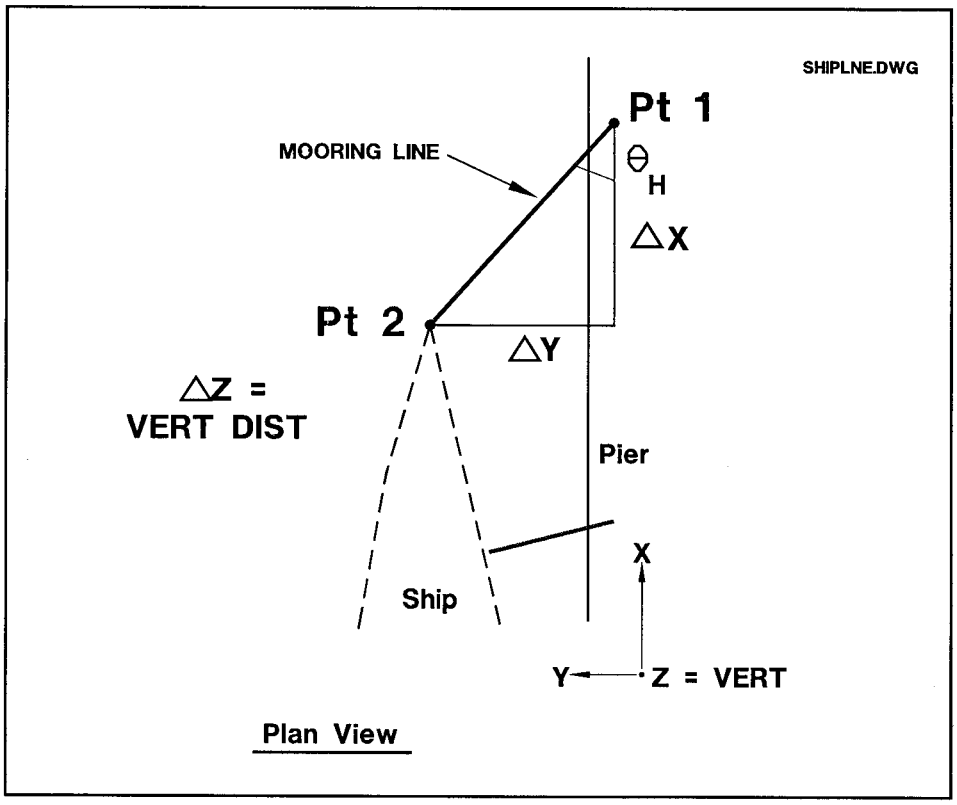

DEFINITIONS:

$$\theta_H = \tan^{-1}\left|\frac{\Delta Y}{\Delta X}\right|$$

$$\theta_V = \tan^{-1}\left|\frac{\Delta Z}{\Delta Y}\right|$$

IF $|\theta_H| < 45$ deg → SPRING LINE

IF $|\theta_H| \geq 45$ deg → BREASTING LINE

Figure 8-6. Optimum Ideal Mooring (Lines are parallel to the water surface and breasting lines are spaced one-half ship's length from midships)

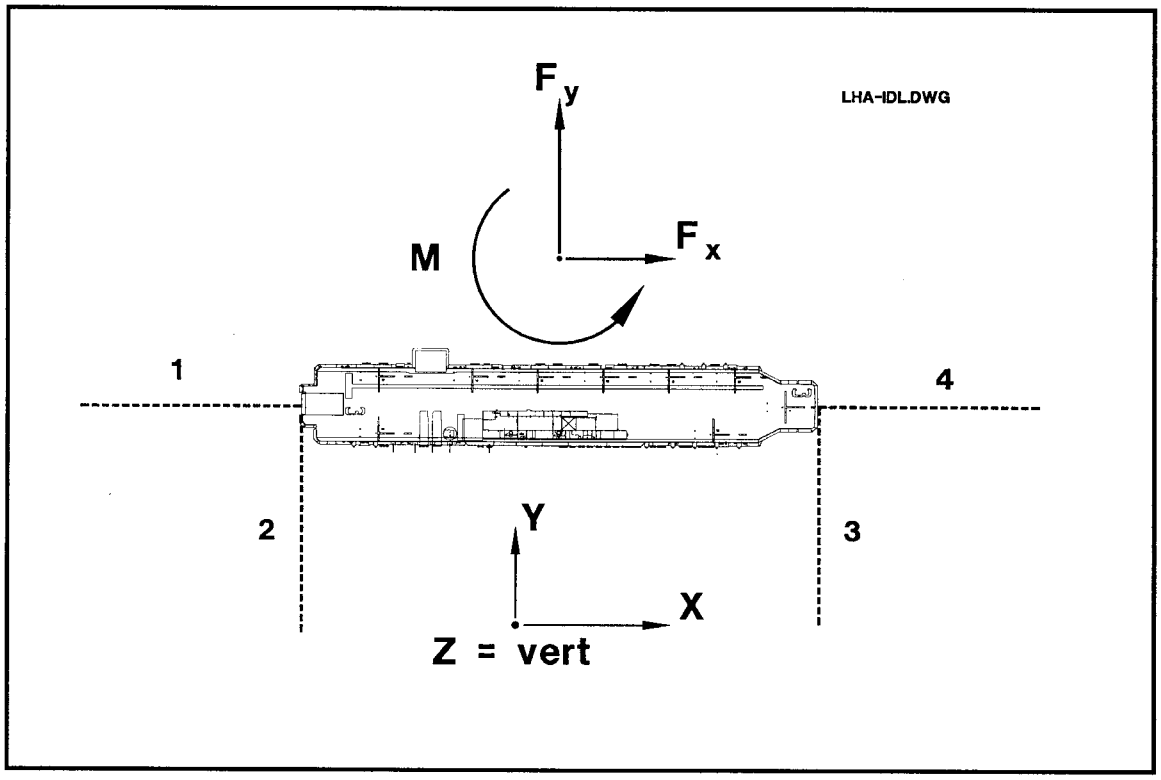

Figure 8-7. Required Mooring Capacity Using the Optimum Ideal Mooring

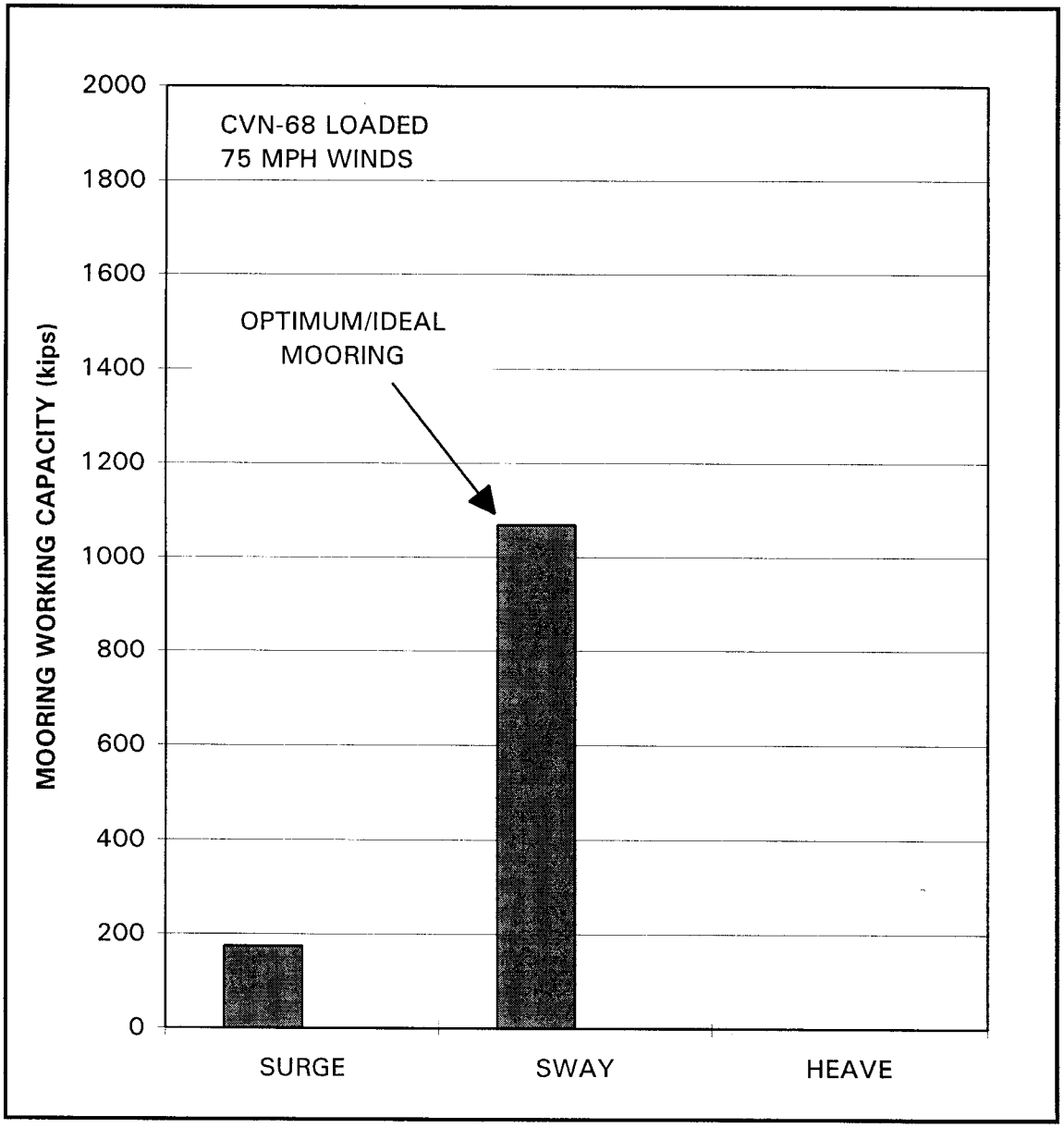

8-3.7 **Wharf Mooring Concept.** Camels and fenders are located between the wharf and ship to offset the ship in this design. Also, the wharf breasting line bollards are set back from the face of the wharf, so that the vertical angles of the breasting lines are approximately 10 degrees. Figure 8-8, from a study of a number of ship moorings at piers and wharves (NFESC TR-6005-OCN) is used to estimate that a mooring system using synthetic lines will have an efficiency of approximately 0.67 for the case of breasting lines with a 10-degree vertical angle. The estimated total required working mooring line capacity is the working line capacity of the optimum ideal mooring divided by the efficiency. In this case, the estimated working line capacity required is 1243 kips/0.67 or approximately 1855 kips.

For extra safety, the selected concept 'Model 2' is given 11 mooring lines of three parts each of aramid mooring line, as shown in Figure 8-9. A single part of line is taken as having a break strength of 215 kips (9.2 E5 newtons). These lines have a combined working strength of 11*3*215/3 = 2365 kips with a factor of safety of 3. These lines are selected to provide extra safety. A component analysis, Figure 8-10, suggests that this mooring concept has adequate mooring line capacity in the surge and sway directions.

Quasi-static analyses are performed by computer using a fixed mooring software program (W.S. Atkins Engineering Sciences, *AQWA Reference Manual*). Analyses are performed for various wind directions around the wind rose. Results show that the mooring line factors of safety are larger than the required minimum of 3 (i.e., line tensions divided by the new line break strength is less than 0.33), as shown in Figure 8-11. In this concept the spring lines are especially safe with a factor of safety of about 10. These analyses show ship motions of approximately 1 foot (0.3 meter) under the action of the 75-mph (33.5-m/s) design winds.

Figure 8-8. Efficiency of Ship Moorings Using Synthetic Lines at Piers and Wharves (after NFESC TR-6005-OCN)

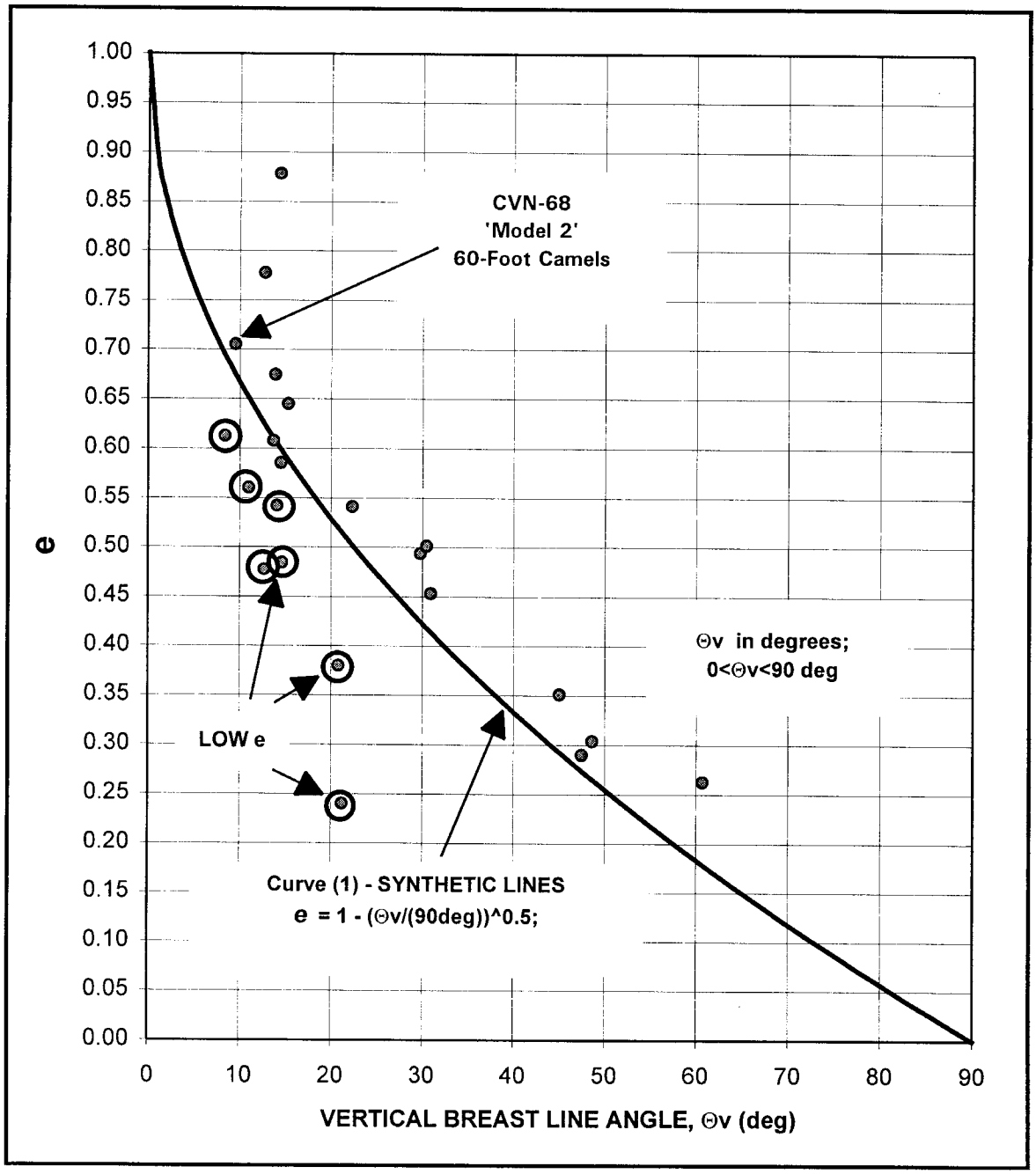

Figure 8-9. CVN-68 Wharf Mooring Concept ('Model 2')

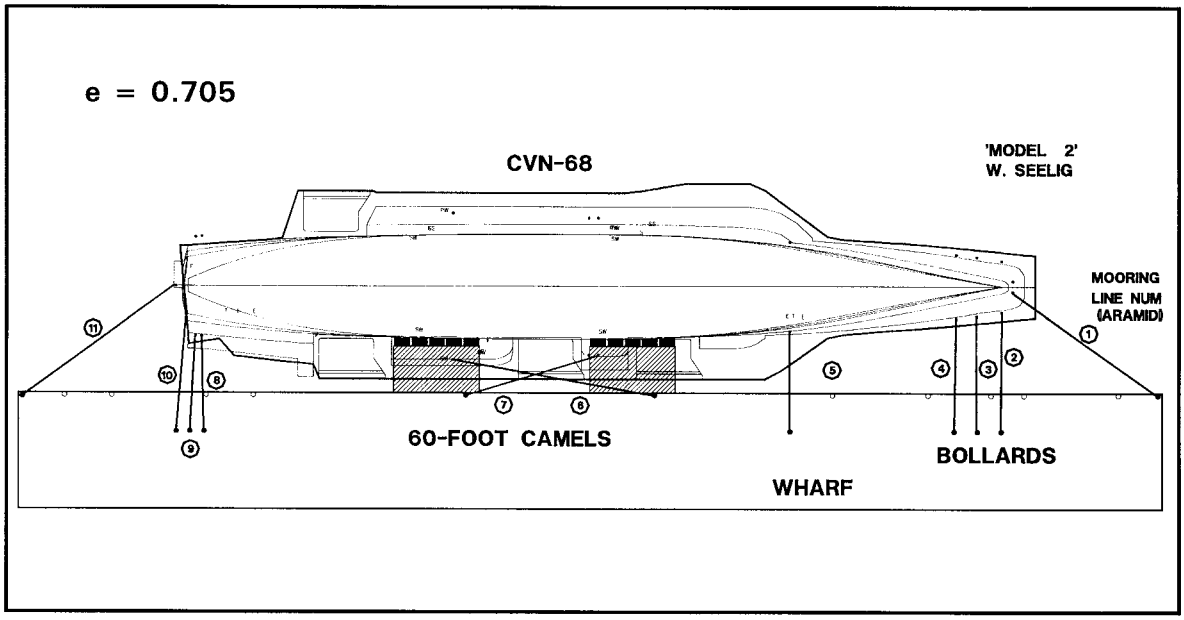

Figure 8-10. Component Analysis of Mooring Working Capacity

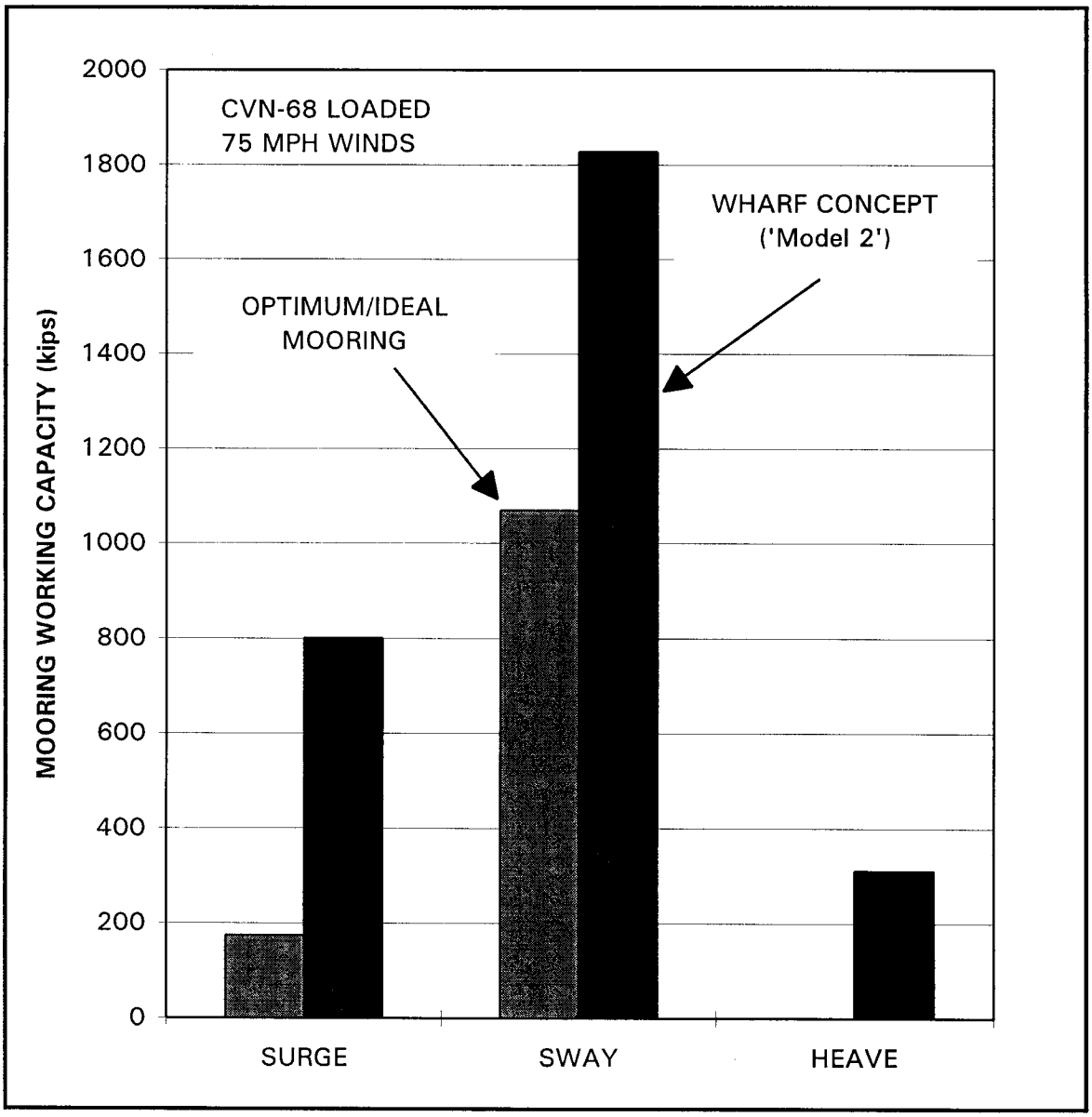

Figure 8-11. Mooring Line Tensions for a CVN-68 Moored at a Wharf With 75 mph (33.5 m/s) Winds ('Model 2')

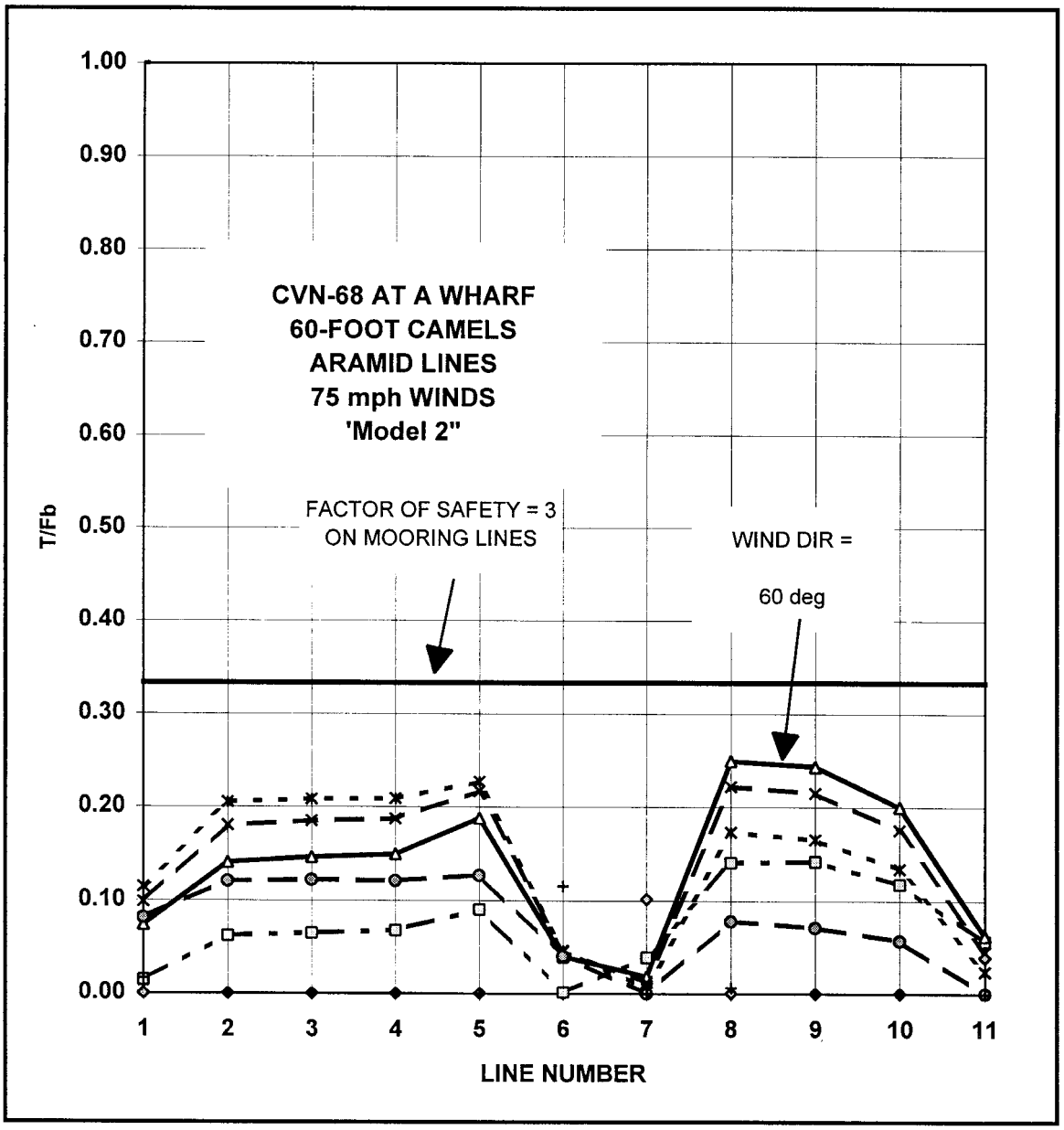

Further quasi-static analyses show this concept is safe in up to 87-mph (38.9-m/s) winds with a factor of safety of 3 or more on all the mooring lines. The computed mooring efficiency for 'Model 2' at this limiting safe wind speed is 0.705, which is slightly higher than the estimated value of 0.67, as shown in Figure 8-5.

These preliminary calculations show that this fixed mooring concept could safely secure the ship. Figure 8-12 illustrates the mooring concept in perspective view. Further information on this example is provided in NFESC TR-6004-OCN, *Wind Effects on Moored Aircraft Carriers.*

8-4 **SPREAD MOORING - BASIC APPROACH.** Design of a spread mooring for a nest of ships is illustrated in this section.

8-4.1 **Background for Example.** SPRUANCE class (DD 963) destroyers are scheduled for inactivation and a mooring is required to secure four of these vessels (NFESC SSR-6119-OCN, *D-8 Mooring Upgrade Design Report*). These ships are inactive and cannot go out to sea, so the mooring must safely secure the vessels in a hurricane using Mooring Service Type IV design criteria. At this location, wind is the predominant environmental factor of concern. At this site the tidal range and tidal current are small. Soil conditions at the site consist of an upper soft silty layer between 50 to 80 feet in depth (15 to 24 meters) over a stiff clay underneath. Water depth at the site ranges between 31 to 35 feet (9.4 to 10.7 meters) MLLW.

8-4.2 **Goal.** Develop a concept to moor four DD 963 class destroyers in a spread mooring. Use Mooring Service Type IV criteria and a design wind speed of 78.3 mph (68 knots or 35 m/s).

8-4.3 **Ship.** The ships are assumed to be at one-third stores/cargo/ballast condition, since DD-963 vessels are unstable in the light condition. Table 8-3 gives some ship parameters. Additional information is found in the NAVFAC Ships Characteristics Database.

Figure 8-12. Aircraft Carrier Mooring Concept (perspective view)

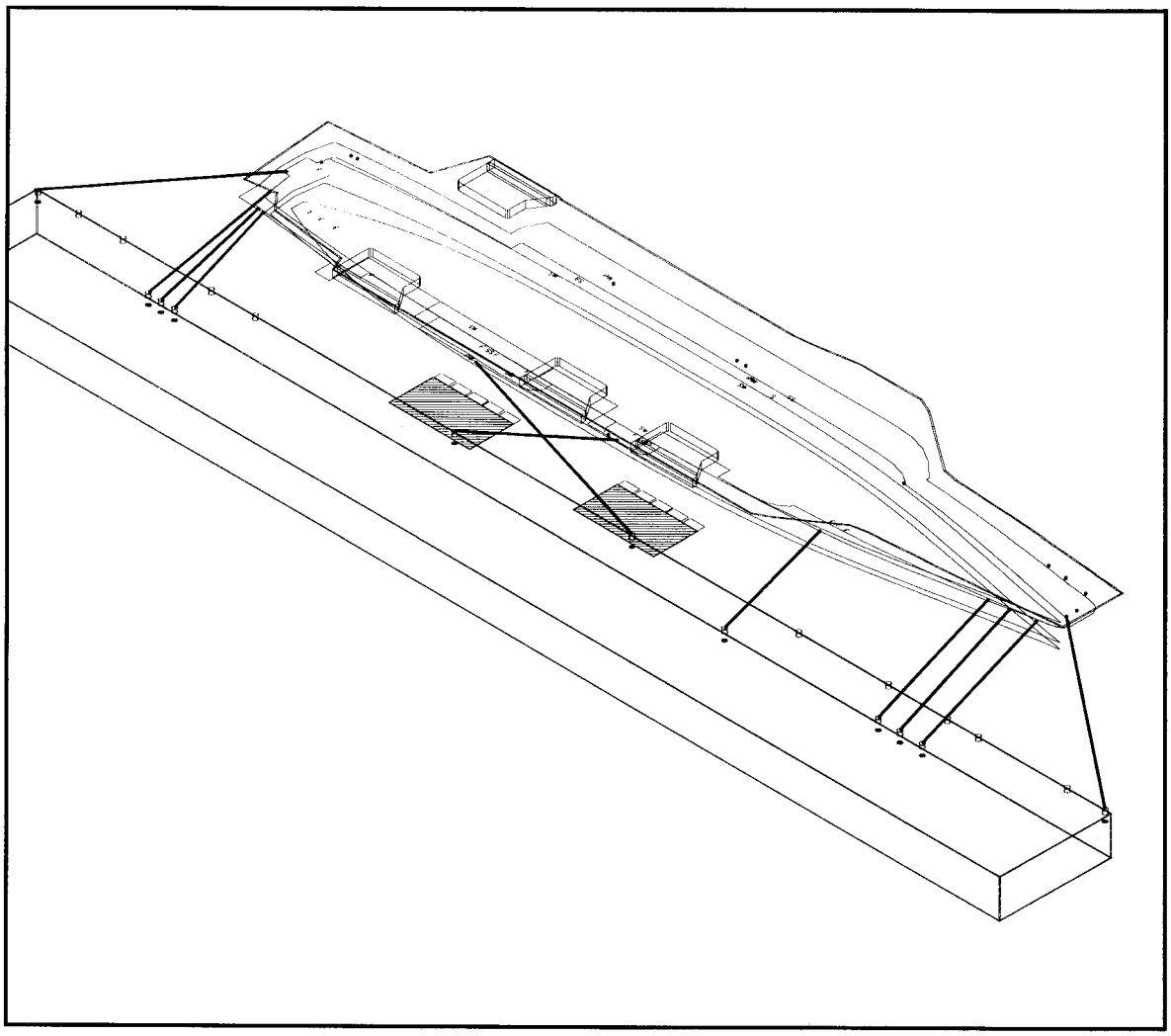

Table 8-3. DD 963 Criteria (1/3 Stores)

PARAMETER	DESIGN BASIS (SI units)	DESIGN BASIS (English units)
Length Overall At Waterline	171.9 m 161.2 m	564 ft 529 ft
Beam @ Waterline	16.8 m	55 ft
Average Draft Draft at Sonar Dome	6.5 m 8.8 m	21.2 ft 29 ft
Displacement	9.07E6 kg	8928 long tons
Chock Height From Baseline	10.7m stern 15.9m bow	35 ft 52 ft

8-4.4 **Forces/Moments.** Methods in Chapter 4, as well as data in NFESC Report TR-6003-OCN, are used to compute the forces and moments on the ships. These values are summarized in Figure 8-13. Wind angles are based on the local coordinate system for a ship shown in Figure 4-2.

Note that wind tunnel model tests show that there is significant sheltering in the transverse direction of downwind ships in this nest of identical ships, as shown in NFESC Report TR-6003-OCN. However, there is little wind sheltering in the longitudinal direction. Table 8-4 summarizes the environmental force calculations used for this example.

Table 8-4. Environmental Forces

Condition	Load (Metric)	Load (US)	Comments
Single DD 963	1663.8 kN	374 kips	Transverse Wind
	257 kN	57.82 kips	Longitudinal Wind
	35972 m-kN	26531 ft-kips	Wind-Yaw Moment
	104.2 kN	23.4 kips	Transverse Current
	2.5 kN	0.56 kips	Longitudinal Current
	1216 m-kN	863.1 ft-kips	Current Yaw Moment
4 ea DD 963	1989.9 kN	447.4 kips	Transverse Wind
	1028.7 kN	231.3 kips	Longitudinal Wind
	64595 m-kN	47643 ft-kips	Wind-Yaw Moment
	190.6 kN	42.8 kips	Transverse Current
	9.8 kN	2.2 kips	Longitudinal Current
	3342 m-kN	2372.7 ft-kips	Current Yaw Moment

8-4.5 **Anchor Locations.** Driven-plate anchors are selected as a cost-effective method to safely moor the nest of ships. The soils at the site are soft harbor mud of depths between 50 to 80 feet (15 to 24 meters), so a chain catenary will form below the seafloor (in the mud) as well as in the water column, as illustrated in Figure 6-6 (Section 6-10). A horizontal distance of 100 feet (30 meters) between the anchor location and the chain daylight location (point where the anchor leg chain exits the seafloor) is estimated based on Chain Soil Analysis Program (CSAP) modeling of the chain catenary in the soil and in the water column.

Figure 8-13. Wind Forces and Moments on a Nest of Four DD 963 Class Vessels for a Wind Speed of 78 mph (35 m/s)

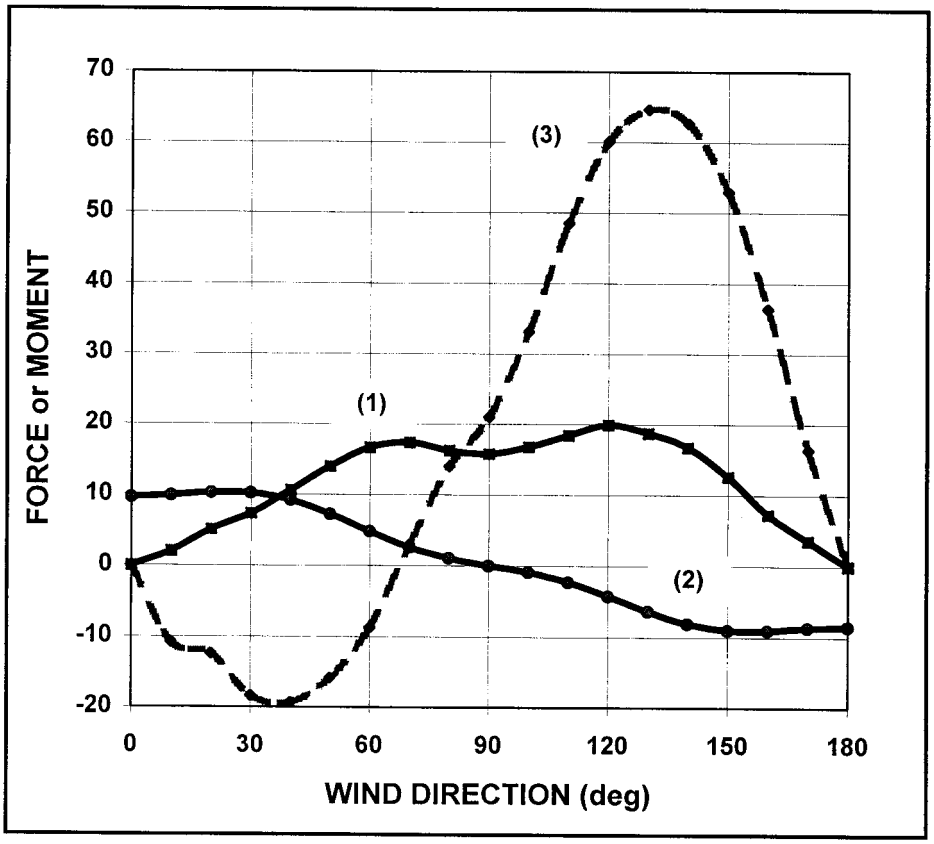

CURVE		GRAPH LIMITS	MAX. VALUE
(1)	Transverse Wind Force	E5 N	447.4 kips
(2)	Longitudinal Wind Force	E5 N	231.3 kips
(3)	Yaw Moment	E6 N	47643 kip-ft

To ensure the mooring legs are efficient in resisting the imposed environmental horizontal forces, a target horizontal distance of 170 feet (52 meters) is chosen between the predicted daylight location (where the chain exits the soil) and the attachment point on the ship for each of the mooring legs. Therefore, anchor locations are established at a horizontal distance of 270 feet (82 meters) away from the vessel.

8-4.6 **Definitions.** In this example, a local ship and a global coordinate system are defined. The local ship coordinate system is used to determine environmental loads at the various wind and current attack angles, as shown in Figure 4-2, with the origin of

the “Z” direction at the vessel keel. A global coordinate system for the entire spread mooring design is selected with the point (0,0,0) defined to be at a specific location. For this example, the origin is selected to be in the middle of the vessel nest and 164 feet (50 meters) aft of the stern of the vessels. The origin for the “Z” direction in the global coordinate system is at the waterline. This global coordinate system is used by the various analysis programs to define the “chain daylight” locations and the location of the vessel center of gravity within the spread mooring footprint.

8-4.7 **Number of Mooring Legs.** It is estimated that eight 2.75-inch chain mooring legs are required, based on the safe working load of the chain (289 kips or 1.29 E6 newtons) and the applied environmental forces and moments on the nest of ships. Four legs are situated on both sides of the nest and each mooring leg is angled to be effective in resisting the longitudinal wind forces, as well as lateral wind forces and moments, from winds approaching at angles other than broadside. Legs are also placed toward the ends of the nest to be effective in resisting the yaw moment. To help control ship motions, two 20-kip (9000-kg) sinkers are placed on each mooring leg approximately midway between the vessel attachment point and the predicted chain daylight location. A schematic of the planned spread mooring arrangement is shown in Figure 8-14.

Figure 8-14. Spread Mooring Arrangement for a Nest of Four Destroyers

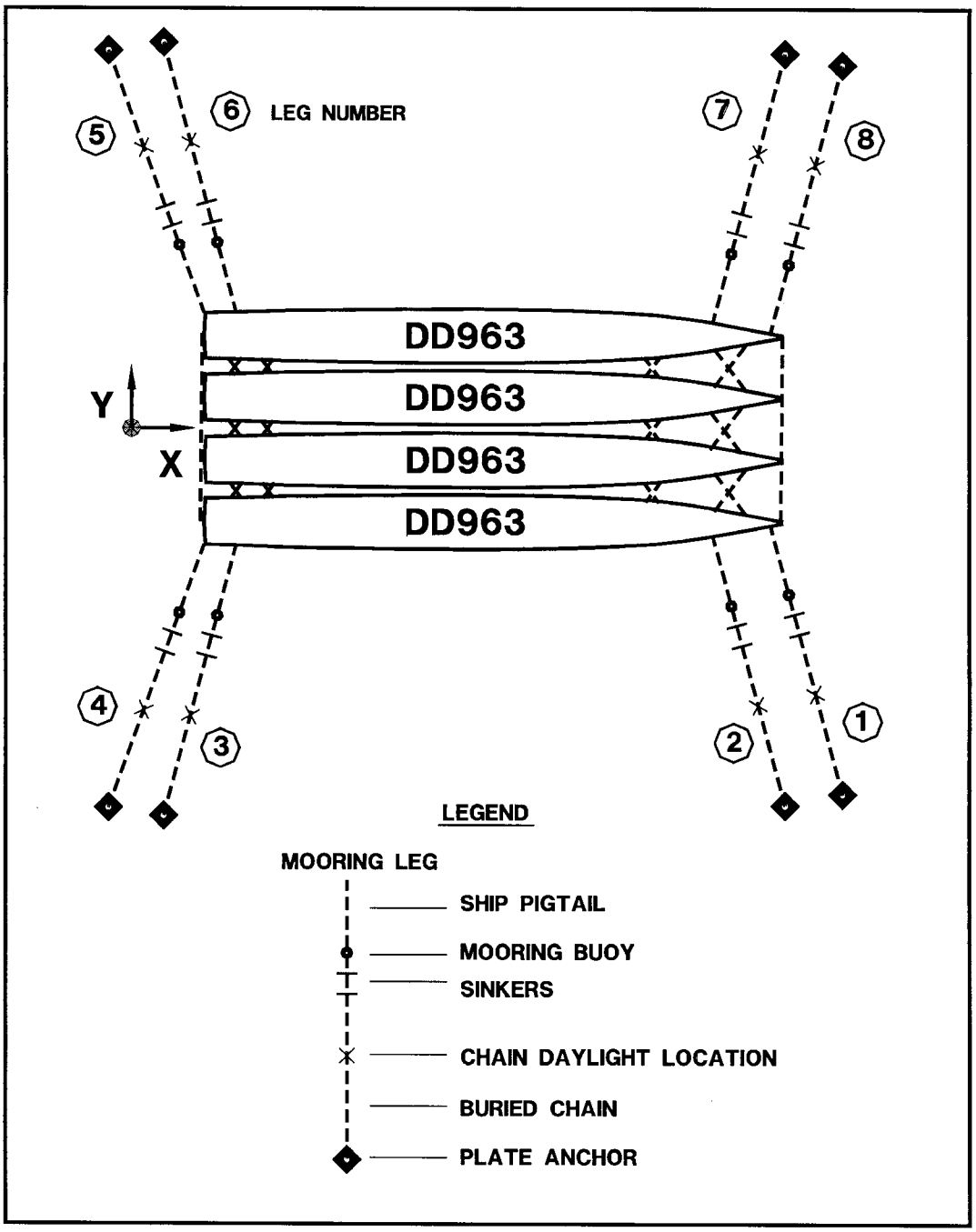

8-4.8 **Static Analysis.** A quasi-static analysis is performed on the mooring system using a mooring analysis program (W.S. Atkins Engineering Sciences, *AQWA Reference Manual;* other approved mooring analysis programs could have been used). Each mooring leg is initially pretensioned to a tension of 4.4 kilo-newtons (10 kips). Quasi-static analysis is performed for various combinations of wind and current directions. Quasi-static results for various wind directions in conjunction with a 60-degree flood tidal current of 0.6 knots (0.31 m/s) are shown in Table 8-5.

Table 8-5. Quasi-Static Leg Tensions for the Spread Mooring at Various Wind Directions With a Flood Tidal Current

Wind Direction							
LEG	0	30^0	60^0	90^0	120^0	150^0	180^0
kN							
1	52.49	214.99	447.01	609.02	945.05	866.04	541.00
2	-	62.50	347.99	486.02	769.03	927.03	571.03
3	693.00	941.04	844.02	588.02	560.00	343.99	93.50
4	668.00	808.04	611.02	387.00	255.02	45.60	-
5	622.01	490.03	84.52	-	-	-	-
6	563.02	454.00	64.72	-	-	-	-
7	-	-	-	-	-	220.99	449.01
8	-	-	-	-	-	309.02	564.00
Kips							
1	11.8	48.33	100.49	136.91	212.45	194.69	121.62
2	-	14.05	78.23	109.26	172.88	208.4	128.37
3	155.79	211.55	189.74	132.19	125.89	77.33	21.02
4	150.17	181.65	137.36	87	57.33	10.25	-
5	139.83	110.16	19	-	-	-	-
6	126.57	102.06	14.55	-	-	-	-
7	-	-	-	-	-	49.68	100.94
8	-	-	-	-	-	69.47	126.79

- Indicates that the leg does not get loaded

A maximum load of 943 kilo-newtons (212 kips) occurs on Leg 1 at a wind direction of 120 degrees. This provides a quasi-static factor of safety of approximately 4 to the breaking strength of 2.75-inch FM3 chain.

8-4.9 **Dynamic Analysis.** A dynamic analysis is performed on the mooring system to evaluate peak mooring loads and vessel motions using a mooring analysis program (W.S. Atkins Engineering Sciences, *AQWA Reference Manual*). The initial location of the vessel nest is based on the equilibrium location of the vessel nest determined in the quasi-static analysis. An Ochi-Shin wind spectrum is used to simulate the design storm *(Wind Turbulent Spectra for Design Consideration of Offshore Structures*, Ochi-Shin, 1988). This simulation is performed for a 60-minute duration at the peak of the design storm.

Figure 8-14 shows that the four vessels in the nest are close together and Figure 8-15 shows that the ships have a large ratio of ship draft to water depth. In this case it is estimated that the ships will capture the water between them as the ships move. Therefore, the nest of moored ships was modeled as a rectangular box having a single mass with the dimensions of 161.2 meters (length of each ship at the waterline), 71.62 meters wide (four ship beams + 5 feet spacing between ships), and 6.5 meters deep (average vessel draft). Added mass for sway and surge was computed as if the nest was cylindrical in shape with a diameter equal to the average draft. Damping as a function of frequency was estimated from a diffraction analysis (W.S. Atkins Engineering Sciences, *AQWA Reference Manual*).

Dynamic analyses were performed for various combinations of wind and current directions using a wind speed time history that simulated the design storm. Results showing the instantaneous peak tensions for various wind directions in conjunction with a flood tidal current of 0.6 knots (0.31 m/s) are shown on Table 8-6.

Figure 8-15. End View of DD 963 Mooring Nest

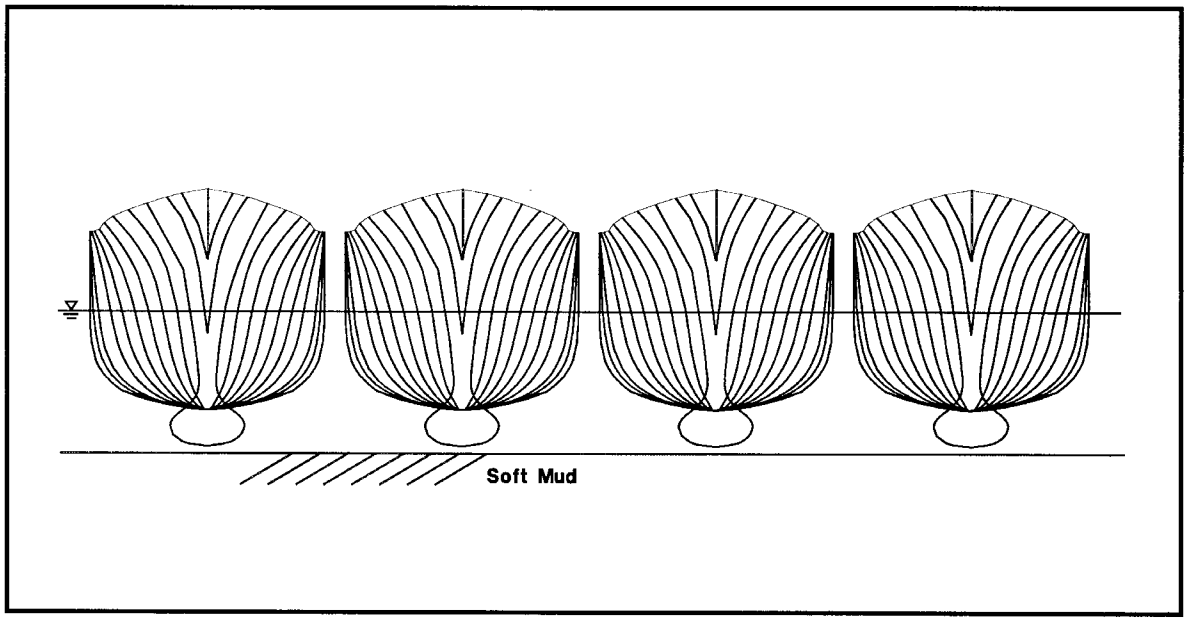

Table 8-6. Peak Dynamic Chain Tensions for DD 963 Nest for Various Wind Directions and a Flood Tidal Current

Wind Direction							
LEG	0	30^0	60^0	90^0	120^0	150^0	180^0
KN							
1	167.05	288.9	634.03	828.68	2246.2	1848.5	731.73
2	55.089	174.58	430.31	545.27	1067.2	1152.1	720.54
3	1202.5	1625	995.98	818.81	1370	647.78	210.62
4	1362.2	1651.7	653.82	480.82	486.77	240.56	-
5	1284.2	1356.4	219.12	-	-	-	-
6	938.06	901.87	217.04	-	-	-	-
7	-	-	-	-	55.019	374.91	514.26
8	-	-	-	-	170.54	485.43	834.54
Kips							
1	37.55	64.95	142.53	186.29	504.95	415.55	164.50
2	12.38	39.25	96.74	122.58	239.91	259.00	161.98
3	270.33	365.31	223.90	184.07	307.98	145.62	47.35
4	306.23	371.31	146.98	108.09	109.43	54.08	-
5	288.69	304.92	49.26	-	-	-	-
6	210.88	202.74	48.79	-	-	-	-
7	-	-	-	-	12.37	84.28	115.61
8	-	-	-	-	38.34	109.13	187.61

Modeling shows that the instantaneous peak chain tension of 2246 knots (505 kips) is predicted on Leg 1 as the moored vessel nest responds to wind gusts. This provides a peak instantaneous factor of safety of 1.5 on the breaking strength of the selected chain size. For this example, the peak dynamic chain tension during the 1 hour at the peak of the design storm is 2.4 times the quasi-static tension in the mooring leg with the highest tension, Leg 1.

Nest motions for surge, sway, and yaw are provided in Table 8-7. This table shows that the maximum surge of the vessel nest is approximately 7.4 meters (24.3 feet) from its equilibrium condition at no loading. Maximum sway and yaw of the vessel nest is 3.2 meters (10.5 feet) and 1.59 degrees clockwise, respectively. During a dynamic analysis simulation, nest motions oscillated up to 5.4 meters (17.7 feet) in surge (for a wind direction coming from the stern), 1.9 meters (6.2 feet) in sway (for a wind direction 30 degrees aft of broadside), and 2.1 degrees in yaw (for a wind direction 30 degrees off the stern).

8-4.10 **Anchor Design.** Using the quasi-static design mooring leg tension, anchor capacity and loads on the embedded plate anchor are calculated using procedures outlined in NFESC TR-2039-OCN, *Design Guide for Pile-Driven Plate Anchors* and NFESC CR-6108-OCN, *Anchor Mooring Line Computer Program Final Report, User's Manual for Program CSAP2*. Due to the lower shear strengths of the soft silty upper layers at the site, a 6-foot by 11-foot mud plate anchor is specified (this anchor is summarized in the lower line of Table 5-7). A design keyed depth of 55 feet is selected for the plate anchor. This will provide an estimated static holding capacity of 1913 kN (430 kips).

CSAP is used to predict the mooring leg tension at the anchor. Input requirements of CSAP include: (1) mooring leg configuration between the anchor and the buoy or chock; (2) water depth or height of chock above the seafloor; (3) soil profiles and strength parameters; (4) location and size of sinkers; (5) horizontal tension component of the mooring leg at the buoy or chock; (6) horizontal distance or total length of the mooring leg between anchor and buoy or chock; and (7) anchor depth. Output provided by CSAP includes: (1) chain catenary profile from the anchor to the buoy or chock attachment point; (2) angle of the mooring leg from the horizontal at the anchor, the seafloor, and the buoy or chock; (3) tension of the mooring leg at the anchor, seafloor, and at the buoy or chock; (4) predicted daylight location for the mooring leg; and (5) length of mooring leg required or horizontal distance between anchor and buoy or chock.

Table 8-7. DD 963 Nest Motions for Surge, Sway, and Yaw at Various Wind Directions with a Flood Tidal Current

Wind Direction							
Motion	0^0	30^0	60^0	90^0	120^0	150^0	180^0
Surge (meters)							
Origin	98.17	98.17	98.17	98.17	98.17	98.17	98.17
Start	105.6	105.4	103.6	98.1	93.7	89.2	88.1
Max	106.9	106.8	103.9	98.8	95.1	93.4	93.5
Min	102.3	102.3	102.4	98.1	93.7	89.2	88.1
Diff	4.6	4.5	1.5	0.7	1.4	4.2	5.4
Sway (meters)							
Origin	0.0	0.0	0.0	0.0	0.0	0.0	0.0
Start	0.84	1.49	2.39	2.97	1.27	2.02	1.14
Max	0.84	1.49	2.65	3.13	3.22	2.50	1.45
Min	0.52	0.83	0.93	1.35	1.27	1.43	1.11
Diff	0.32	0.66	1.72	1.78	1.93	1.07	0.34
Yaw (degrees)							
Origin	0.0	0.0	0.0	0.0	0.0	0.0	0.0
Start	0.76	1.09	1.43	0.64	-0.08	-0.74	-0.89
Max	0.76	1.18	1.59	0.80	-1.22	-1.49	-1.12
Min	0.38	0.27	0.43	-0.25	0.76	0.54	-0.83
Diff	0.38	0.91	1.16	1.05	1.96	2.03	0.29

For this example, a keyed anchor depth of 55 feet was selected. Input data included: (1) configuration of the mooring leg (30 feet of 3-inch wire attached to 2+ shots of 2.75-inch chain); (2) height of seafloor to vessel chock (46 feet stern and 64 feet bow); (3) soil profile and strength for the site (shear strength increases linearly at 10 pounds per ft^2 per foot of depth); (4) information on the sinkers (2 each 20-kip sinkers placed a horizontal distance of 170 feet away from the anchor; (5) horizontal tension component of the mooring leg from the quasi-static results (195 kips); (6) horizontal distance between anchor and chock (280 feet) from the quasi-static results; and (7) depth of anchor (55 feet).

CSAP results for this design leg at this anchor depth indicate that the predicted daylight location of the mooring leg is approximately 99 feet (30 meters) from the anchor location and the leg tension at the anchor is 166 kips. A profile of this leg is shown in Figure 6-6. Note that the interaction between the chain and the soil accounts for a 25 percent reduction in tension on the mooring leg at the anchor. This gives a predicted quasi-static anchor holding factor of safety of 2.6.

Based on the CSAP results, 6-foot by 11-foot plate anchors are specified. Based on predicted keying distances required for this anchor, as outlined in NFESC TR-2039-OCN, *Design Guide for Pile-Driven Plate Anchors*, the anchors should be installed to a tip depth of 70 feet (21 meters) below the mudline to ensure that the anchor is keyed at a minimum depth of 55 feet (16.8 meters). Figure 8-16 provides a comparison between tip depth, keyed depth and ultimate capacity for this size anchor.

Further information concerning this design is provided in NFESC SSR-6119-OCN.

Figure 8-16. Plate Anchor Holding Capacity (6-foot x 11-foot anchor with keying flaps in soft mud)

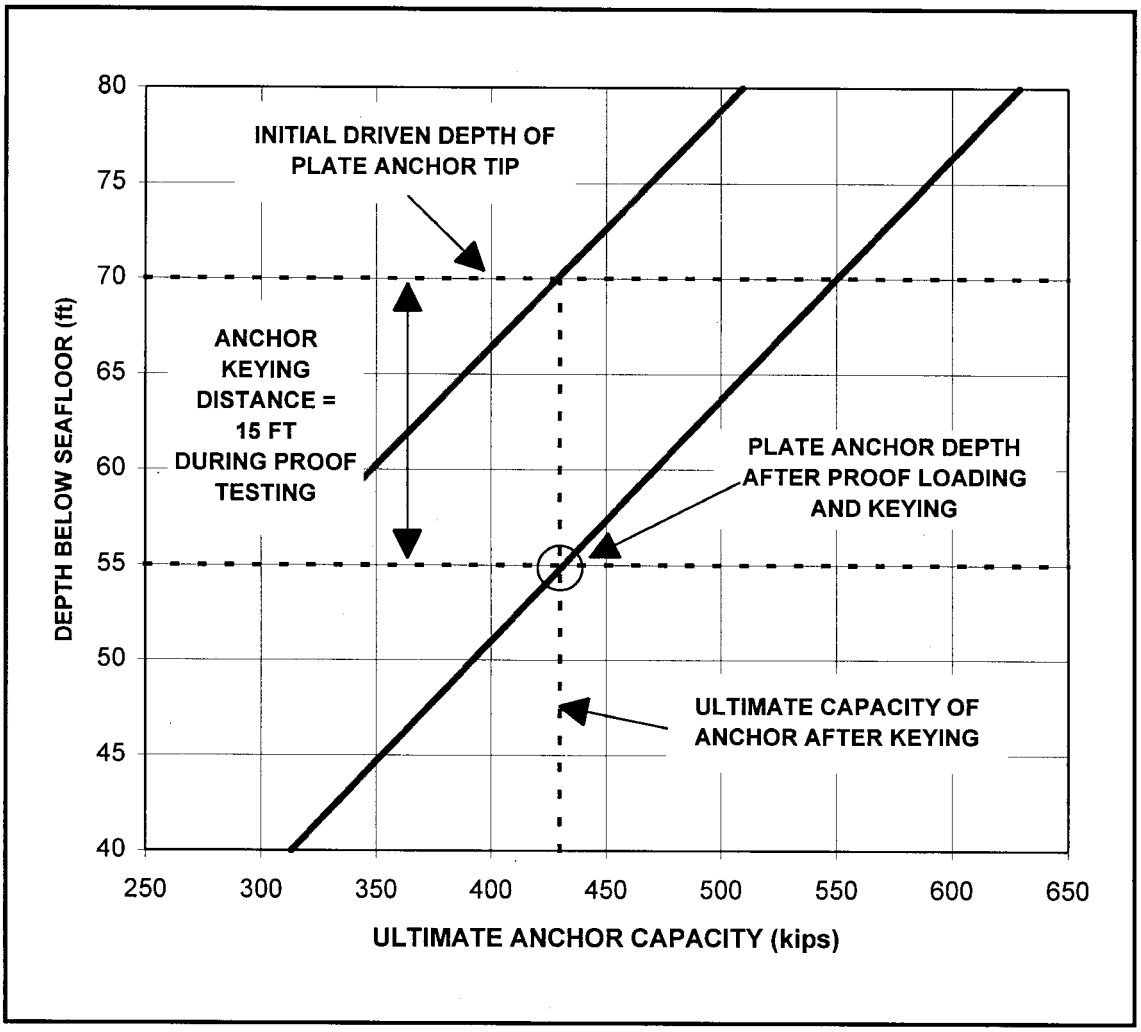

8-5 **MOORING LPD-17, LHD-1 AND LHA-1.** As funding and time permit we are preparing general guidelines and recommendations for mooring and/or anchoring various classes of U.S. Navy ships. Work to date includes:

Reference	Title
NFESC TR-6020-OCN	*Mooring USS WASP (LHD 1) Class Ships*
NFESC TR-6028-OCN	*Mooring USS TARAWA (LHA 1) Class Ships*
NFESC TR-6045-OCN	*LPD-17 USS SAN ANTONIO Class Berthing, Mooring and Anchoring*

Detailed information on mooring these three classes of ships is provided in the reports listed above.

8-5.1 **Mooring LPD-17.** Examples of mooring LPD-17 (Figure 8-17 and Table 8-8) are illustrated in this section.

Figure 8-18 is a summary of the estimated safe mooring limits for LPD-17 based on the EMOOR planning tool for the ship moored with 28 parts of ship's lines. Figure 8-18 (upper) is for a water depth of 45 feet (i.e. T/d = 0.5) and Figure 8-18 (lower) is for a water depth of 25.2 feet (i.e. T/d = 0.9). The diagonal lines on the graph correspond to various broadside current speeds, *Vc*. The dashed horizontal lines are for the cases of 50-knot and 64-knot winds. The X-axis on each diagram is the mean vertical angle of the breasting lines. The Y-axis is the estimated maximum safe wind speed.

For example, take the case of the ship moored at a berth with a water depth of 25 feet and a broadside current of 1.5 knots. For a mean vertical breasting line angle of 30 degrees, the maximum estimated safe wind speed from Figure 8-18 (lower) is 53 knots.

Figure 8-17. LPD-17 USS SAN ANTONIO (Upper – hull form and mooring fitting locations, Lower – profile view)

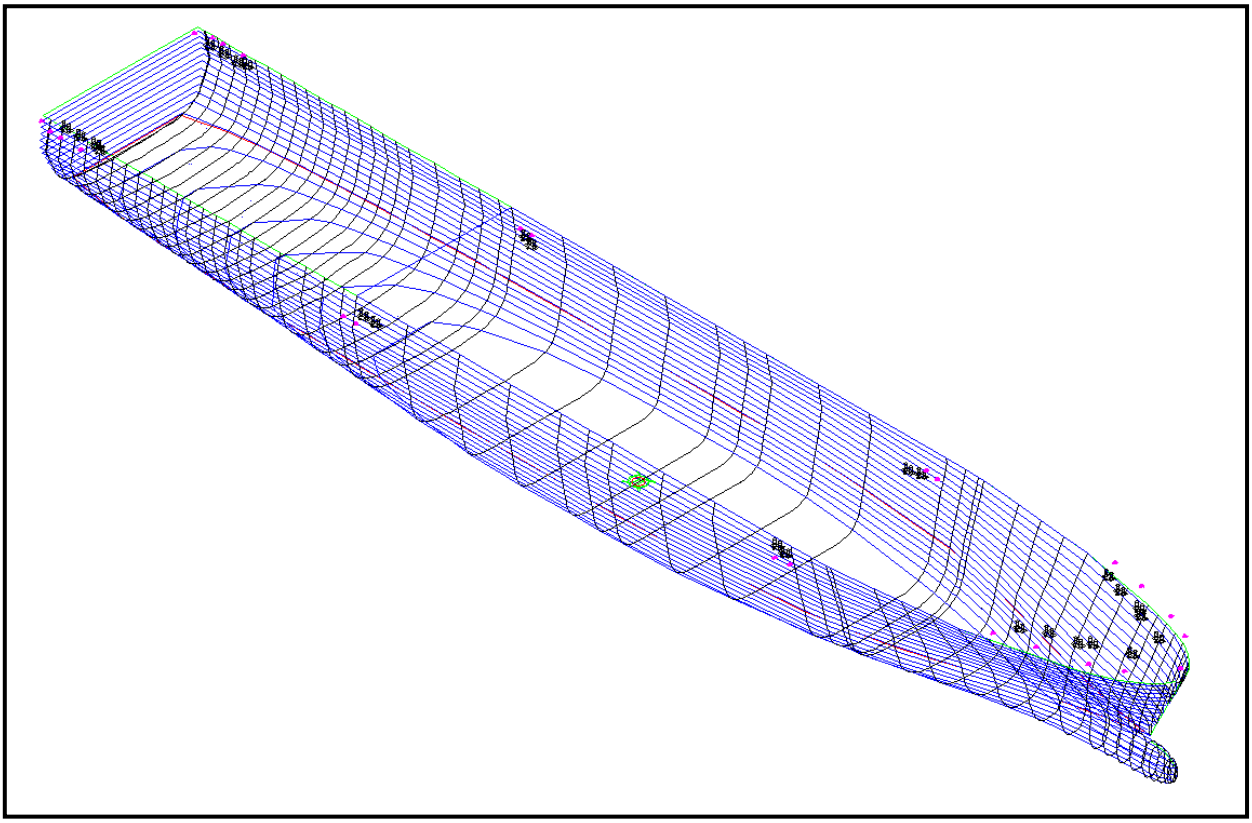

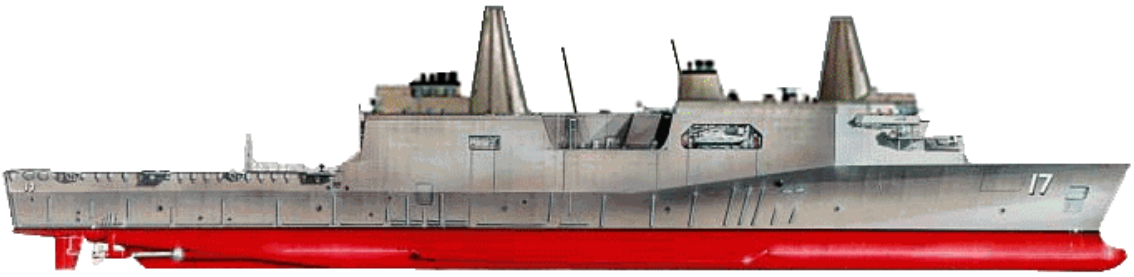

Table 8-8. LPD-17 Characteristics

Parameter	*Metric*	*English*
Displacement (Full Load)	2.43 X 10^7 kg	26,750 US tons 23,880 longtons
Draft (Full Load)	6.9 m	22.64 ft
Length Overall	208.5 m	684 ft
Length at Design Waterline	201.5 m	661 ft
Bow Overhang from DWL Perpendicular	6 m	19.68 ft
Stern Overhang from DWL Perpendicular	2 m	6.52 ft
Breadth, Molded Maximum	31.9 m	104.67 ft
Breadth, Amidships at DWL	29.46 m	96.67 ft
Lowest Projection above DWL	6.81 m	22.33 ft
Highest Projection above DWL	48.16 m	158 ft
Deck Elevation (01 Level) above DWL	12 m	39.33 ft
$C_m = C_x$ Midships Coefficient	0.937	0.937
C_b Block Coefficient	0.601	0.601
C_p Prismatic Coefficient	0.641	0.641
Wetted Surface Area	6,340 m^2	68,246 ft^2
Waterplane Area	4,722 m^2	50,830 ft^2
Vertical Center of Gravity****	11.13 m	36.5 ft
Natural Period in Roll	13.37 sec	13.37 sec
Vertical Center of Pressure ****	12.32 m	40.4 ft
Anchors (two-fluke, balanced fluke type)	13,800 kg**	30,425 lbs**
Chain (ABS Grade 3 stud link)***	85 mm	3-3/8 inch
Ship's Mooring Lines: 18 with length of 600 feet; break = 3 with length of 600 feet; break =	8.00 X 10^5 N 12.46 X 10^5 N	180 kips 280 kips
Main Double Bitt Size	305 mm	12 inches
Secondary Double Bitt Size	356 mm	14 inches
Maximum allowable hull pressure	145 kN/m^2	21 psi

* nominal size; ** delivered weight, min. specified 27,550 lbs, one port and one starboard; *** 11 shots port and 13 shots starboard; **** above baseline

Figure 8-18. Approximate Safe Mooring Limits for LPD-17 with 28 Parts of Mooring Line

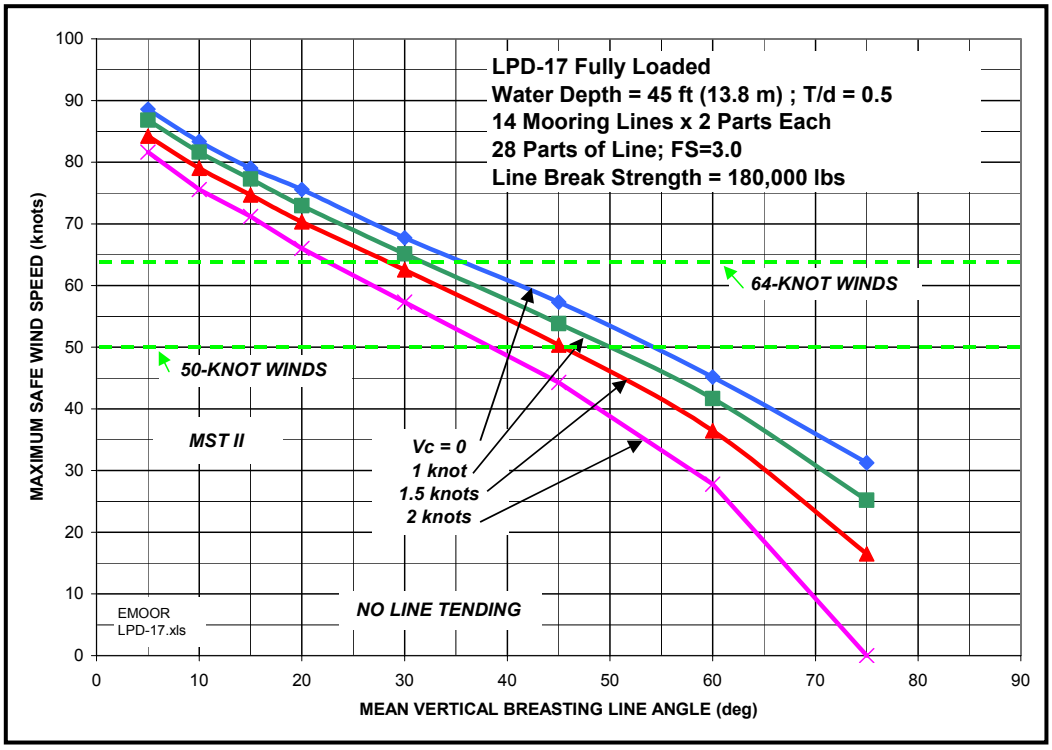

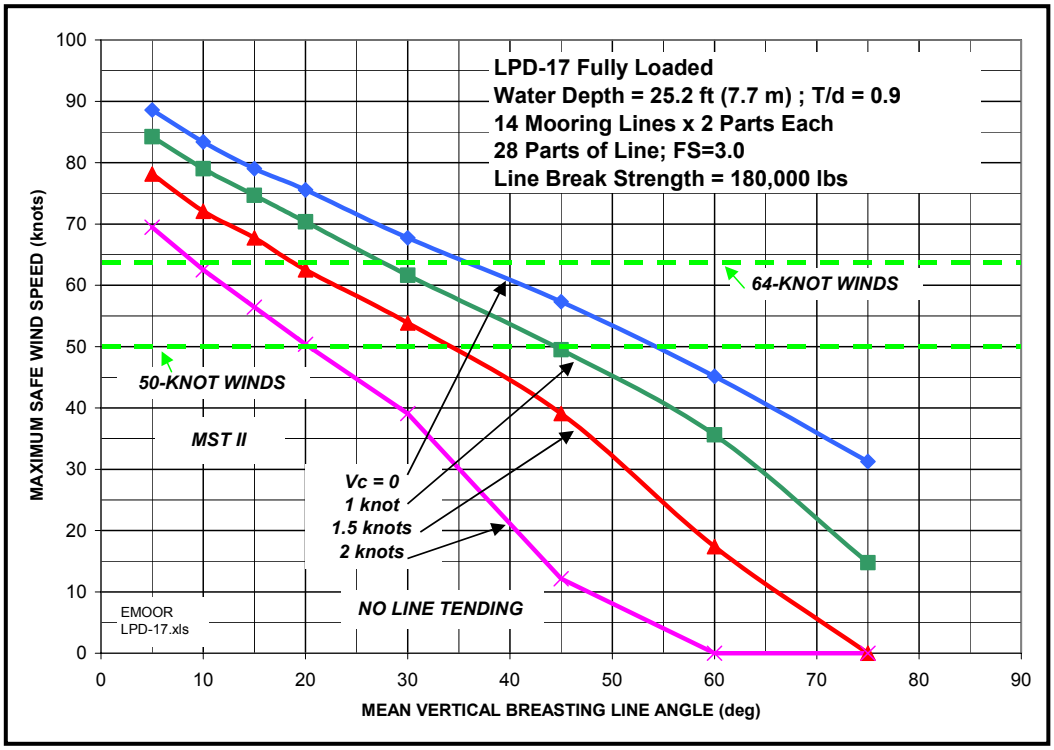

Six degree-of-freedom quasi-static analyses using the program AQWA LIBRIUM are performed on various LPD-17 mooring configurations to determine safe mooring limits as follows:

Figure 8-19 shows a sample Standard Mooring (Mooring Service Type IIa) for the ship broadside to a current pushing the ship off the pier. In this example the water depth is 45.3 feet for a ship draft to water depth ratio of T/d = 0.5. The maximum safe wind speed for various current speeds is illustrated with a factor of safety of 3.0 or higher on all mooring lines.

Figure 8-20 shows a sample Storm Mooring (Mooring Service Type IIb) for the ship broadside to a current pushing the ship off the pier. For the case of a major approaching storm the lines are run across the pier to the bollards on the opposite side to significantly improve mooring efficiency. In this example the water depth is 30.2 feet for a ship draft to water depth ratio of T/d = 0.75. The maximum safe wind speed for various current speeds is illustrated with a factor of safety of 3.0 or higher on all mooring lines.

Figure 8-21 shows a sample Heavy Weather Mooring (Mooring Service Type III) for the ship broadside to a current pushing the ship off the pier. For the case of a major approaching storm or hurricane the lines are run across the pier to the bollards on the opposite side to significantly improve mooring efficiency. Ship's lines are not adequate for heavy weather mooring. Therefore, double braided polyester lines are used because they have excellent fatigue resistance and some stretch to help improve load sharing. In this example the water depth is 40 feet for a ship draft to water depth ratio of T/d = 0.57. The maximum safe wind speed for various current speeds is illustrated with a factor of safety of 2.5 or higher on all mooring lines. These dynamic analyses were performed with the six-degree-of-freedom AQWA DRIFT. Figure 8-22 illustrates LPD-17 mooring at a double-deck pier.

Figure 8-19. Sample LPD-17 Standard Mooring (Mooring Service Type IIa)

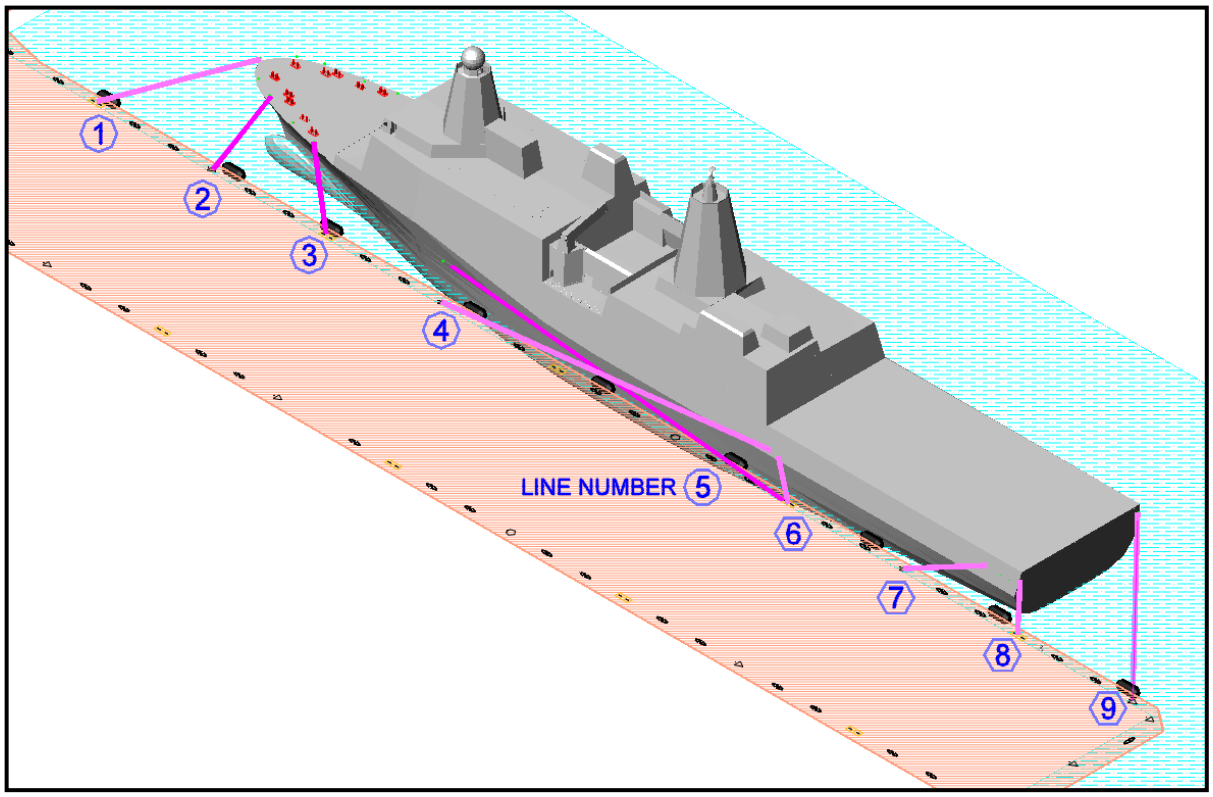

Ship's Mooring Lines
9 Lines of 2 Parts Each = 18 parts of line
1-Foot Slack Added to Lines 2, 7 & 8
Factor of Safety = 3.0[a]
Water Depth = 45.3 feet (T/d = 0.5)
Maximum Safe Wind Speed for:

Broadside

Current Speed	Maximum Safe Wind Speed
0-knots	55 knots
1-knot	48 knots
1.5-knots	44 knots
2-knots	37 knots

[a] Factor of safety on new lines with all lines intact. With the most heavily loaded line broken,
the factors of safety will likely be reduced.

Figure 8-20. Sample LPD-17 Storm Mooring (Mooring Service Type IIb)

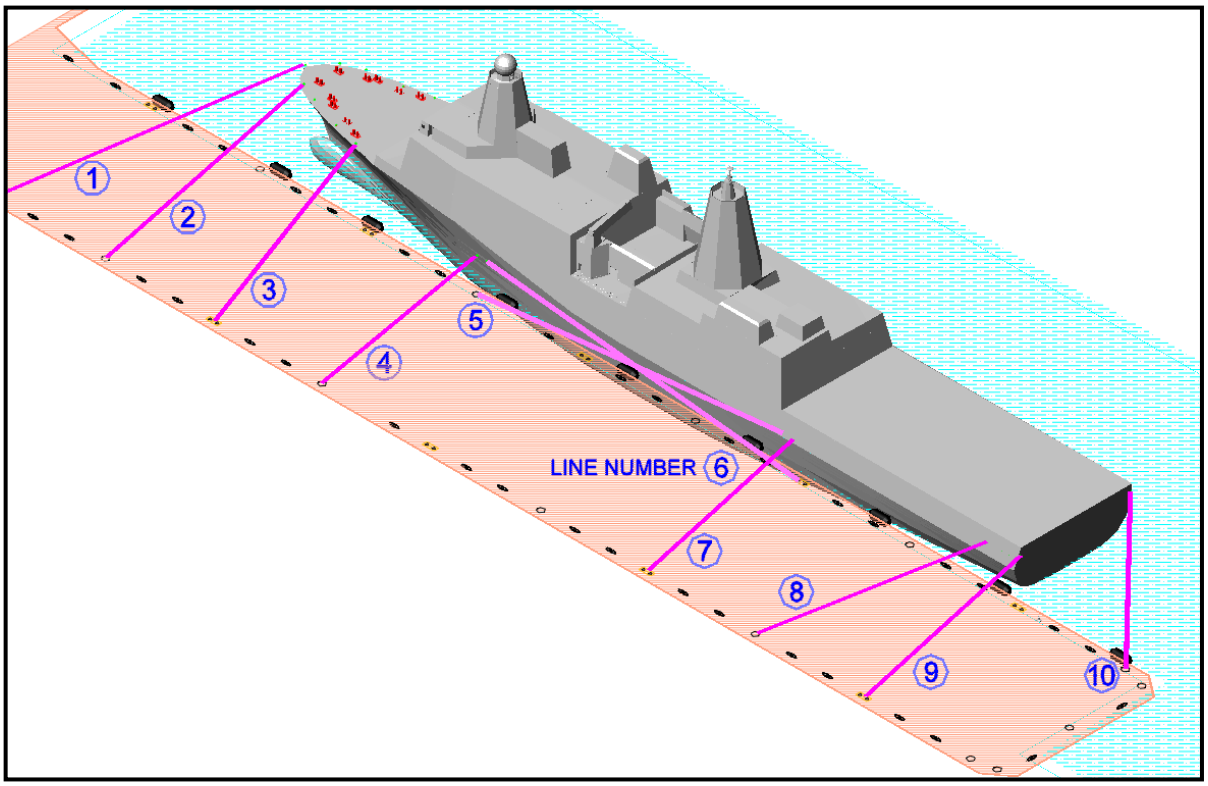

Ship's Mooring Lines
10 Lines of 3 Parts Each = 30 parts of line
Factor of Safety = 3.0 (see note on Fig. 8-19)
Water Depth = 30.2 feet (T/d = 0.75)
Maximum Safe Wind Speed for:

Broadside

Current Speed	Maximum Safe Wind Speed
0 Knots	85 knots
1 knot	81 knots
1.5 knots	76 knots
2 knots	68 knots

Figure 8-21. Sample LPD-17 Heavy Weather Mooring (Mooring Service Type III)

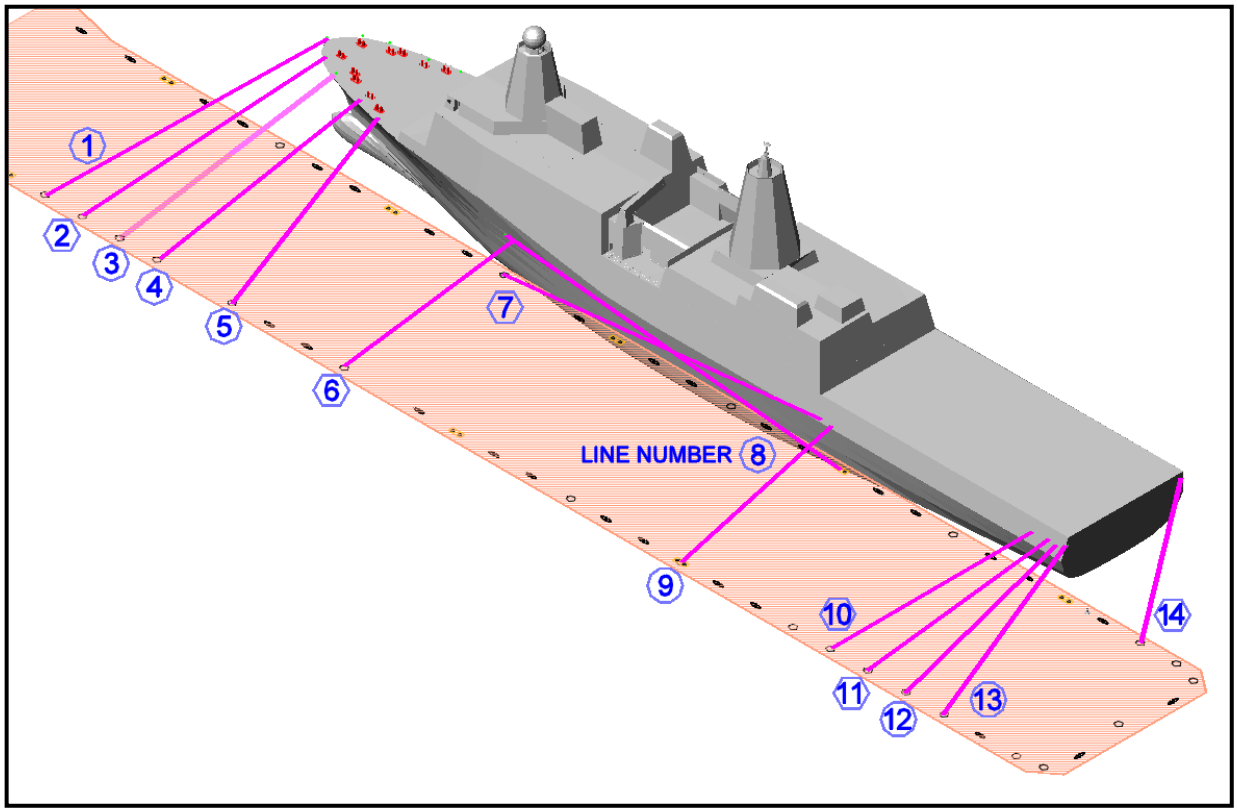

Double Braided Polyester Lines Fb=180 kips
14 Lines of 3 Parts Each = 42 parts of line
Factor of Safety = 2.5 (see note on Fig. 8-19)
Water Depth = 40 feet (T/d = 0.57)
Maximum Safe Wind Speed for:

Broadside

Current Speed	Maximum Safe Wind Speed
0 knots	118 knots
1 knot	117 knots
1.5 knots	115 knots
2 knots	113 knots

Figure 8-22. Sample LPD-17 Mooring at a Double-Deck Pier

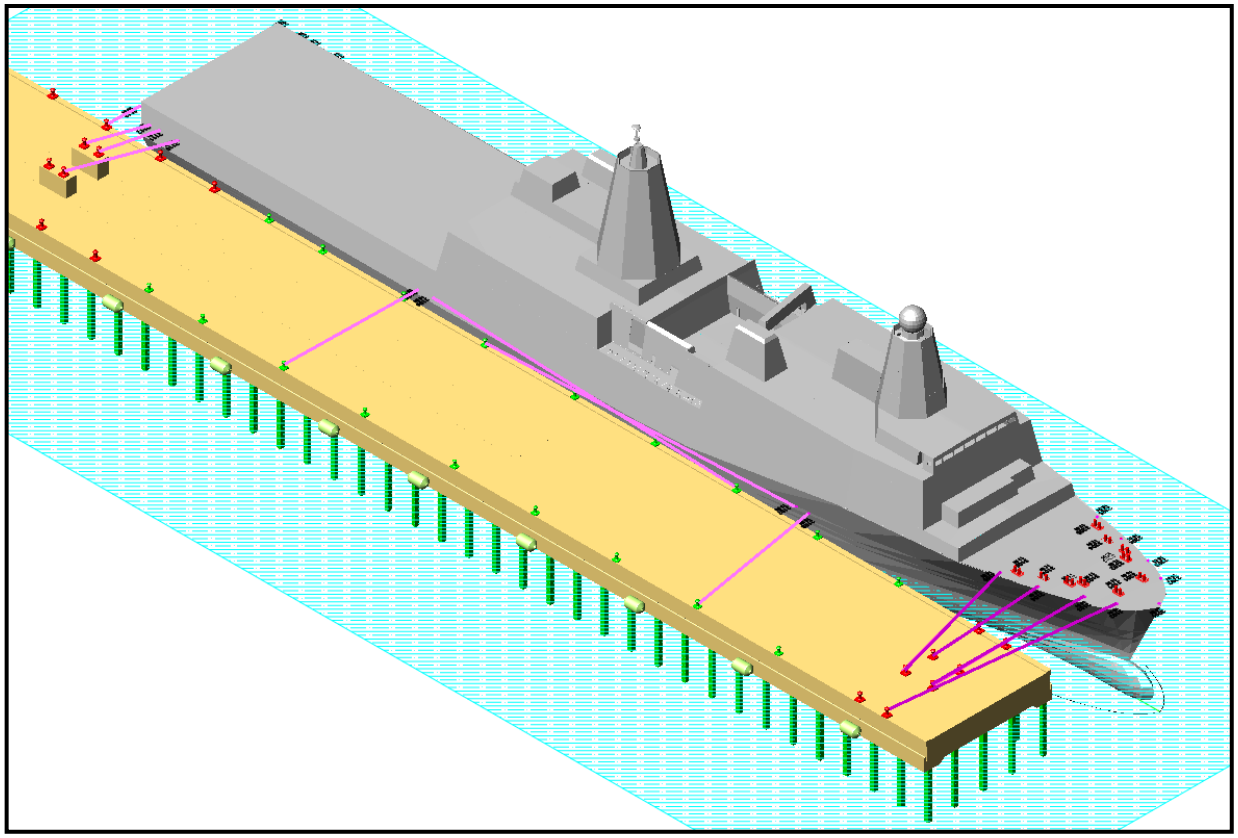

CHAPTER 9

PASSING SHIP EFFECTS ON MOORED SHIPS

9-1 **INTRODUCTION.** A ship moving through the water generates several types of waves that may have an effect on moored ships, structures, shoreline erosion, etc. One type of wave generated is a long-period pressure wave that may be very small. However, this long wave (together with Bernoulli effects) may have a major influence on moored ships.

9-2 **PASSING SHIP EFFECTS ON MOORED SHIPS.** A ship navigating in a harbor or channel can produce major forces/moments on a nearby moored ship. The moored ship is forced through a combination of wave, long-wave and Bernoulli effects (NFESC TR-6027-OCN). NSTB Marine Accident Report, PB91-916404, NSTB/MAR-91/04, for example, discusses a case where a nearby passing ship caused a moored tanker to break its mooring and fuel lines. The resulting fire caused loss of life, in addition to total loss of the pier and tanker.

The forces and moments acting on the moored ship depend upon a great number of parameters including, relative size of the two ships, water depth, as well as passing ship speed and separation from the moored ship. Figure 9-1 shows an example passing ship case for parallel ships. This figure shows that the forces and moments acting on the moored ship are highly time-dependant. Therefore, dynamic programs, such as AQWA DRIFT (Century Dynamics, Houston, TX), are used to determine the response of the moored ship to the passing ship.

Parallel passing ships are discussed in detail in NFESC TR-6027-OCN. An associated spreadsheet PASS-MOOR.XLS is available that aids in predicting passing ship forces and moments. Figure 9-2 illustrates example predictions. These examples show that peak forces and moments applied to the moored ship in various degrees of freedom occur at different times and highly dynamic.

A study is now underway (2004) at the U.S. Naval Academy to further refine predictions of forces and moments on moored ships due to passing ships.

Figure 9-1. Sample Passing Ship Situation

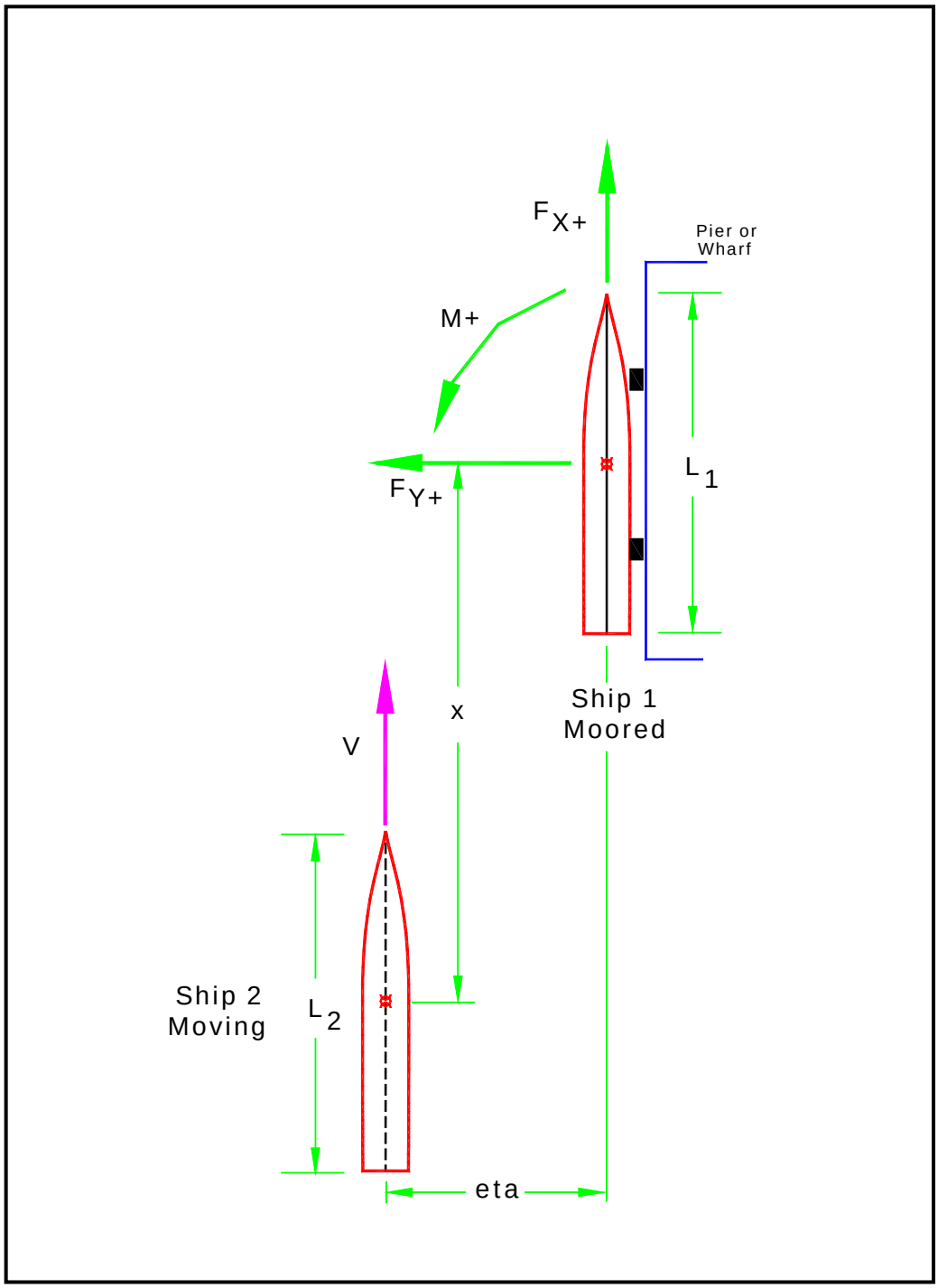

Figure 9-2. Example of Passing Ship Predictions

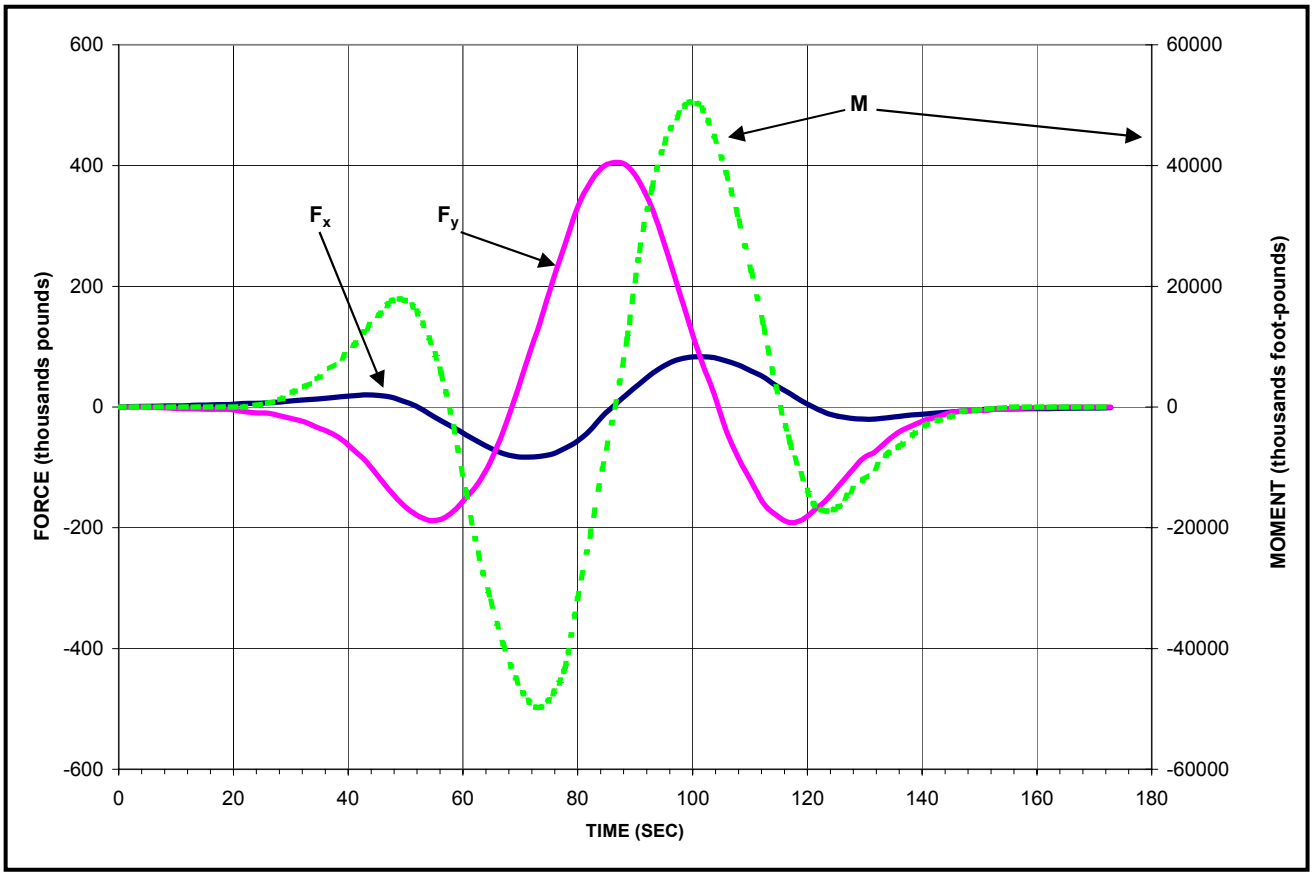

CHAPTER 10

SHIP WAVES

10-1 **INTRODUCTION.** A ship moving through the water generates several types of waves that may have an effect on moored ships, structures, shoreline erosion, etc.

10-2 **SHIP WAVES.** Two of the most noticeable waves generated by moving ships are the diverging (or bow wave) and transverse wave (Figure 10-1). These waves intersect to form a cusp line and then the size of the highest generated wave tends to decrease as the distance from the sailing line increases. Characteristics of the ship-generated waves is a complex function of ship shape, water depth, ship speed, etc. NFESC TR-6022-OCN summarizes measurements and recent findings on ship waves for ship hull-forms, such as those illustrated in Figure 10-2.

A spreadsheet SHIP-WAVE.XLS is available for making ship wave predictions. This spread sheet takes the measurements from a wide range of physical ship wave measurements and uses one type of Froude scaling to predict maximum wave height one wave length away from the ship sailing line for a ship of interest.

Figure 10-3, for example, shows the minimum ship speed required to generate a given maximum wave height one wave length away from the ship sailing line. The x-axis of this figure is water depth. The y-axis of this figure is ship speed. Contours are for selected maximum wave heights. For deep water (the right side of this figure), the wave height generally increases as the ship speed increases for the range of conditions shown. In shallow water the wave height contours are much closer together at higher speeds. This shows that in shallow water a small increase in ship speed produces a dramatic increase in wave height.

The spreadsheet SHIP-WAVE.XLS and NFESC report TR-6022-OCN provides additional information on waves generated by surface ships.

Figure 10-1. Ship Waves (after Sorenson, 1997)

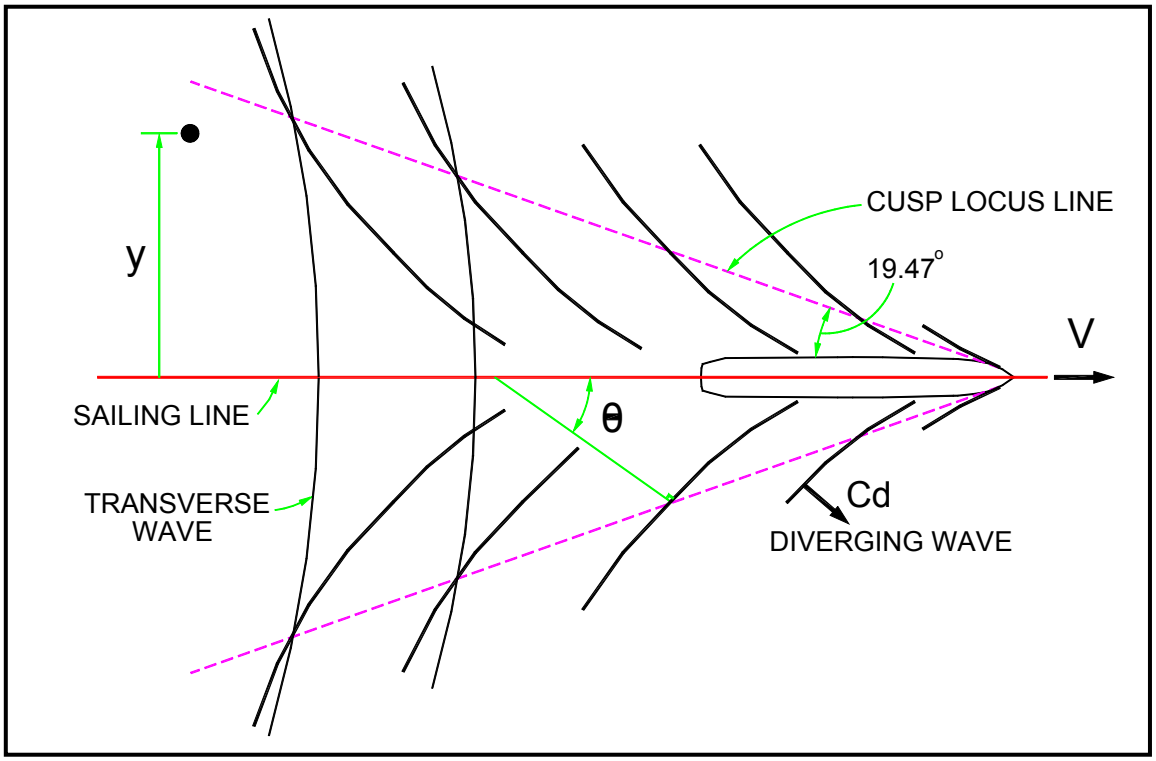

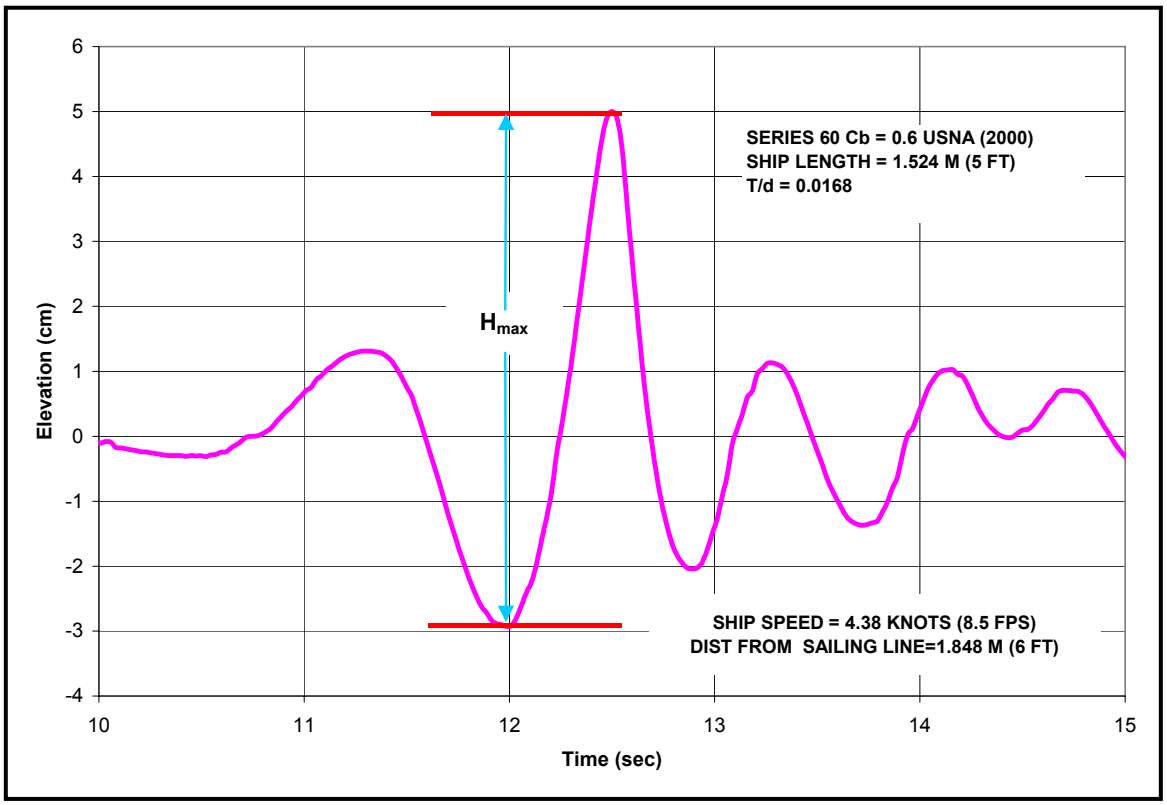

Figure 10-2. Ship Hull-Forms Tested (after Sorenson, 1997)

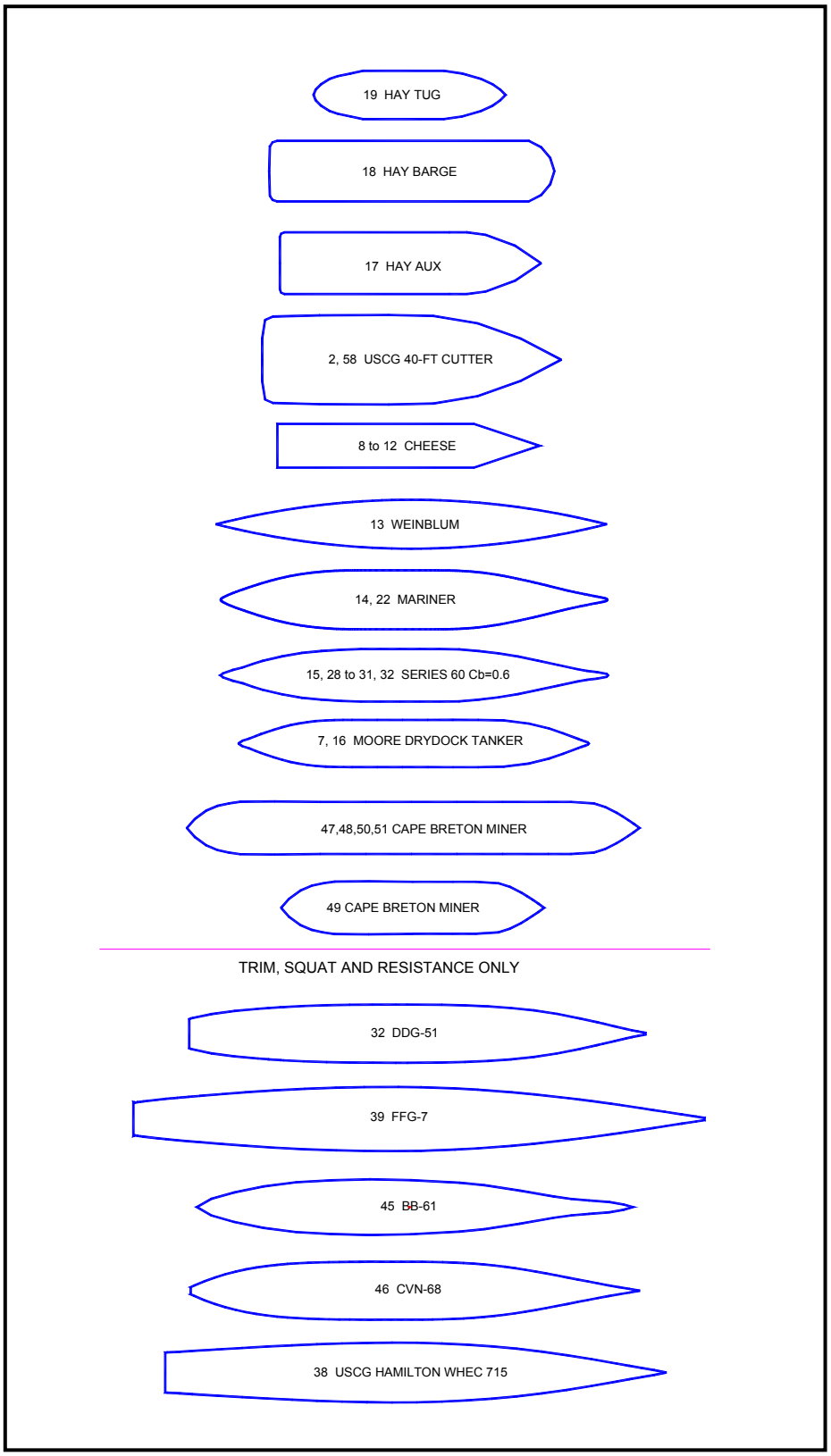

Figure 10-3. Maximum Wave Height One Wavelength Away From the Sailing Line For a SERIES 60 Hull

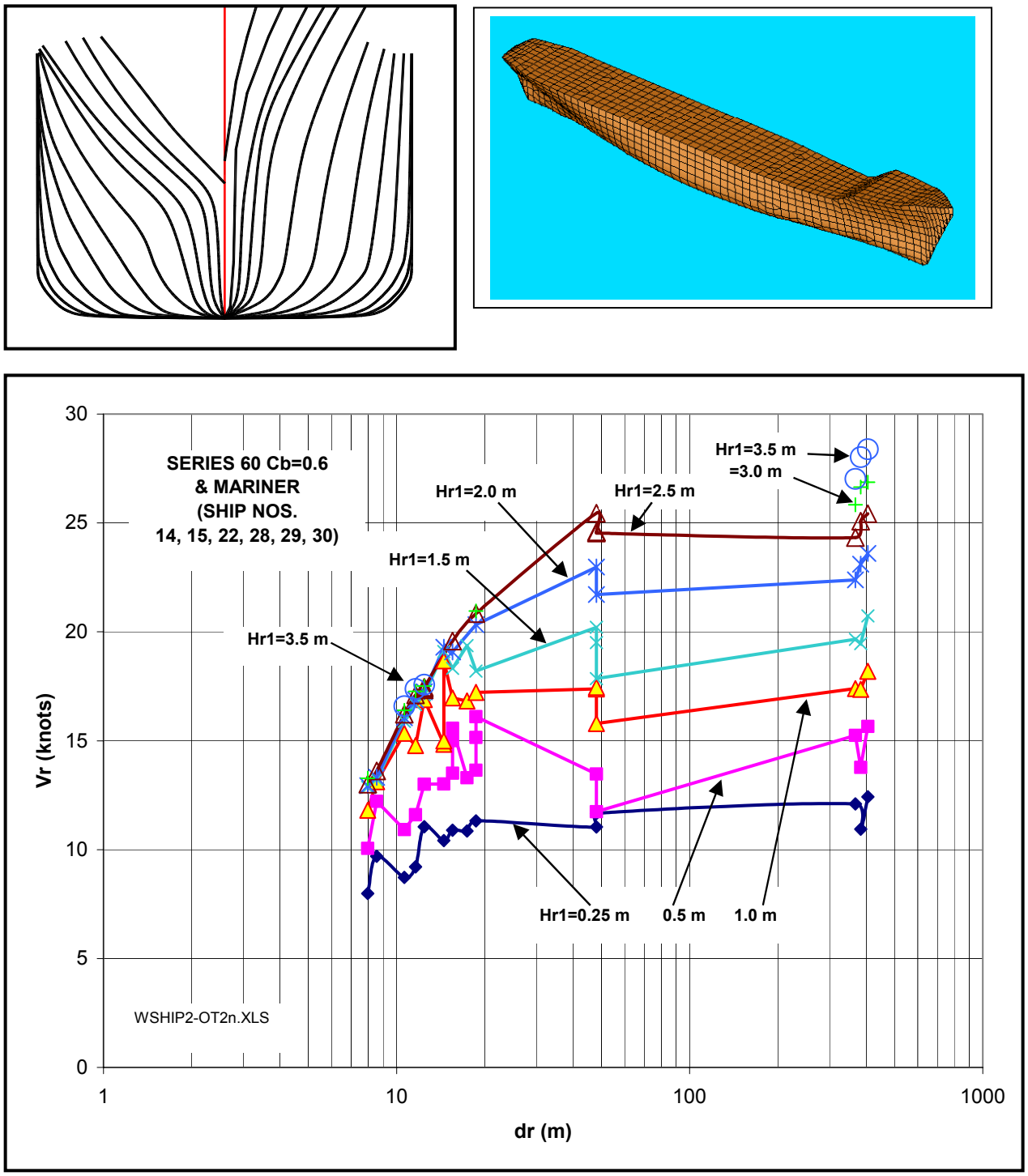

CHAPTER 11

HEAVY WEATHER MOORING GUIDELINES

11-1 **INTRODUCTION.** The purpose of this guidance is to advise facility engineers, planners, and maintenance personnel of minimum facility planning and design criteria necessary to ensure safe mooring of naval vessels during Mooring Service Type III (Heavy Weather). Use this UFC to validate existing sites for heavy weather use and to design new or modified facilities and moorings for heavy weather. Existing facilities and moorings should not be used for heavy weather if they do not meet all criteria noted herein unless provisions are made according to COMNAVSEASYSCOM msg R 130351Z Jul 95 YZB . Since no Building Code or non-government standard exists for Mooring Service Type III design, this UFC provides the relevant safety requirements and criteria for facility aspects of ship mooring.

11-2 **DISCUSSION.** This criteria is a compilation of lessons learned from Heavy Weather mooring studies for COMNAVSURFLANT by COMNAVFACENGCOM, NFESC, and COMNAVSEASYSCOM. This criteria has been extensively coordinated with COMNAVSEASYSCOM and internally within NAVFACENGCOM, COMNAVSURFLANT, CINCLANTFLT N37, N46, and CINCPACFLT N37, N46. It includes state of the art technology in vital facility areas such as mooring and risk assessment. Congressional support for all new construction is dependent on specific planning and design criteria applied consistently throughout the Navy - hence, the need to formalize this criteria. Upgrades to existing facilities likewise require documentation of new “code” requirements. A great deal or work has been performed to ensure that ships are safely moored in Heavy Weather conditions. For example, below is a list of some of the NFESC reports on Heavy Weather mooring.

NFESC REPORT	TITLE
SSR-6078-OCN	*A Preliminary Assessment of Hurricane/Severe Storm Mooring At Naval Station Mayport/Jacksonville, FL*
SSR-6107-OCN	*Heavy Weather Mooring of USS Inchon (MCS-12) at U.S. Naval Station, Ingleside, Texas*
SSR-6112-OCN	*Heavy Weather Mooring of Ships Under Repair in the Hampton Roads Area in 1997*
SSR-6137-OCN	*Heavy Weather Mooring Analyses of Selected Ships Under Repair*, 1998
SSR-6145-OCN	*Heavy Weather Mooring of USS INCHON (MCS-12) at U.S. Naval Station, Ingleside, Texas*
SSR-6148-OCN	*Heavy Weather Mooring Design Report of Avenger and Osprey Class Vessels, U.S. Naval Station, Ingleside, TX*
SSR-6150-OCN	SURFLANT *Heavy Weather Mooring Program, Phase I Completion Report*

SSR-6176-OCN	*Heavy Weather Mooring of FFG-7 and DDG-51 Ships at Subase Kings Bay, Ga*
SSR-6183-OCN	*Concept Study – Mooring Service Type III For a CVN-68 at Navsta Mayport, Fla*
SSR-6260-OCN	*Hurricane Mooring of Ships and Craft at Naval Coastal Systems Center, Panama City, FL*
SSR-6266-OCN	*Plate Anchor Concept for Heavy Weather Mooring of CVN, LHD and LHA, Berth 42/42 Norfolk Naval Shipyard, Portsmouth, VA*
SSR-6282-OCN	*Heavy Weather Mooring, NAVSTA Pascagoula, MS*
SSR-6342-OCN	*Heavy Weather Mooring of USS JOHN F KENNEDY (CV 67) Naval Station, Mayport, FL*
SSR-6368-OCN	*Heavy Weather Mooring and Berthing-Findings/Recommendations for Selected Berths*
TM-6001OCN	*Risk Analysis for Ships Moored at Piers – Generalized Evaluation of USS Tarawa (LHA-1) Mooring*
TM-6015-OCN	*DD(X) Mooring Concepts*
TR-6004-OCN	*Wind Effects on Moored Aircraft Carriers*
TR-6012-OCN Rev B	*U.S. Navy Heavy Weather Mooring Safety Requirements*
TR-6020-OCN	*Mooring USS WASP (LHD-1) Class Ships*
TR-6023-OCN	*Dynamic Analyses of a CVN-68 in a Heavy Weather Mooring*
TR-6028-OCN	*Mooring USS TARAWA (LHA 1) Class Ships*
TR-6045-OCN	*LPD-17 USS SAN ANTONIO Class Berthing, Mooring and Anchoring*

11-3 **HEAVY WEATHER MOORING GUIDELINES.** Ships under repair in graving docks may be relatively safe, since the ships are relatively protected from the potentially high wind forces and are out of current and waves effects. However, ships at piers and wharves may be subjected to high winds, wind gusts, wind gust fronts, currents, waves, storm surges, etc. It is common practice for U.S. Navy ships to exit port prior to arrival of hurricanes and other forecasted extreme weather conditions. This practice is normally executed when destructive winds (sustained wind speed above 50 knots) are expected in the local area. However, ships in availability (i.e. under repair) may not be able to go to sea. Therefore, these ships must be moored safely during heavy weather or be moved to nearby safe facilities before storm arrival. COMNAVSEASYSCOM msg R 130351Z Jul 95 YZB provides operational recommendations to mitigate many effects of Heavy Weather. The effectiveness of these mitigation measures is difficult to quantify. Therefore, facilities are often relied upon to resist the loads. In each home porting region, only a portion of all berthing facilities must be capable of heavy weather mooring, since only a portion of the ships

cannot go to sea. Ships carry enough lines to moor in Mooring Service Type II as defined below, but not for Type III. Also, facilities are generally designed for Type II and not Type III.

This section provides some general guidelines on Heavy Weather mooring. For additional information, see the publications listed above. For safe Heavy Weather mooring:

Ensure that the facility, mooring fittings and fenders are adequate (see UFC 4-150-07 *Maintenance of Waterfront Facilities*, UFC 4-150-08 *Inspection of Mooring Hardware*, UFC 4-151-10 *General Criteria for Waterfront Construction*, MIL-HDBK-1025/1 *Piers and Wharves, etc*.).

Identify alternative piers or wharves that the ship could be towed to that may be safer and work out ahead of time all the logistics necessary to ensure that the needed berth would be available and that the ship could arrive and be safely moored in adequate time.

The facility needs to provide heavy weather mooring lines, since ship's lines are generally inadequate. Double braided polyester lines are recommended for Heavy Weather mooring, because the lines have excellent fatigue resistance. These lines also have some stretch which aids in load sharing between lines and helps accommodate water level changes.

It is standard practice to first put the ship in a Standard of Storm Mooring (i.e. Mooring Service Type Iia or Iib) when a ship comes to a facility for repair (Figure 11-1 upper). These types of moorings are used since the mooring lines can be secured to mooring fittings near the ship, so the mooring lines have minimum interference with repair work.

It is then standard practice to put the ship in a Heavy Weather mooring (i.e. Mooring Service Type III) if storms, hurricanes or other threatening conditions are expected (Figure 11-1 lower). In Heavy Weather mooring, for example, mooring lines may be run

Figure 11-1. Example of a Standard LPD 17 Mooring (Upper) and Heavy Weather Mooring (Lower)

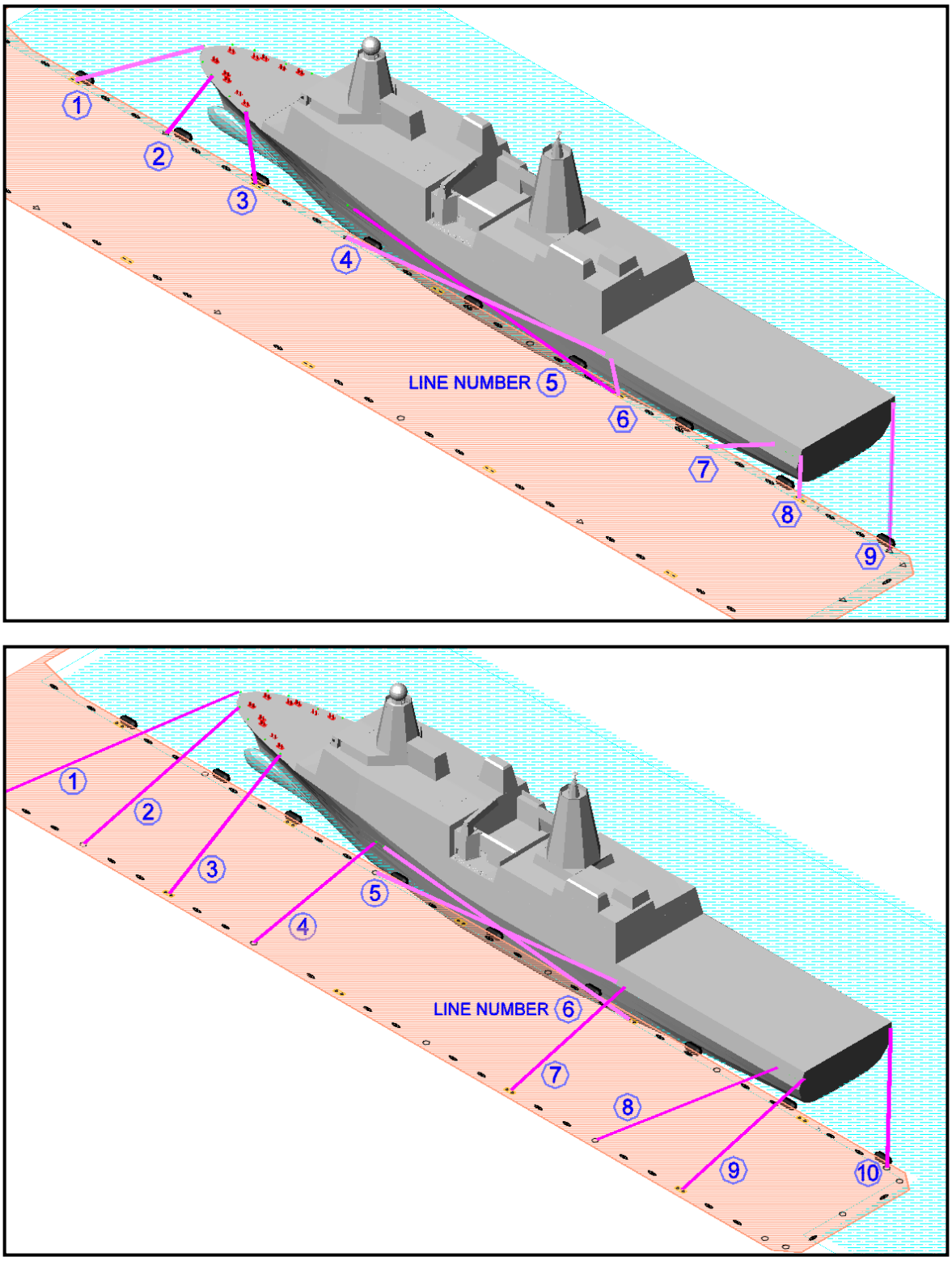

across the pier to improve mooring efficiency and increase the number of mooring lines that are used.

Detailed structural analyses show that ship's double bitts have the maximum safe working capacity when equal load is applied to each of the two barrels of the bitts. It is recommended that methods be used to provide for equal loading to the barrels in Heavy Weather mooring. This can be accomplished by various methods:

Using two parts of mooring line. Put an eye over the barrel of a set of bitts and run to the shore fitting. Repeat for the second barrel. Carefully tend the lines so both parts of line have the same pretension.

Using one line in two parts (Figure 11-2). Put an eye over one barrel and run to the shore fitting. Run the line around a sheave, equalizer or tie down the loop of line going around the shore fitting. Then tie off the end of the line to the second barrel of the ship's double bitts.

Detailed Heavy Weather mooring designs need to be prepared for each ship at each berth. These designs need to consider the site-specific design criteria and special circumstances. As a general rule-of-thumb:

Provide adequate numbers of breasting lines to safely secure the ship. Place the lines towards the bow and towards the stern so they resist both lateral loads and moments.

Breasting lines should be approximately perpendicular to the ship's centerline (to resist loads and moments), be of similar length (to help improve load sharing) and should all have low vertical angles (to improve mooring efficiency and help account for water level changes).

Provide adequate numbers of spring lines, which are approximately parallel to the ship's centerline. Equal numbers of spring lines should be run towards the bow and stern. These lines should have rather low vertical angles to account for water level changes.

It is recommended that preliminary designs be developed with quasi-static designs and factors of safety of 2.5 or higher on all components. Dynamic methods can then be used to refine and verify the designs. The various references cited in this section provide examples of Heavy Weather mooring designs. Chapter 8 of this UFC also provides Heavy Weather mooring examples.

Figure 11-2. Securing Two Parts of Heavy Weather Mooring Line

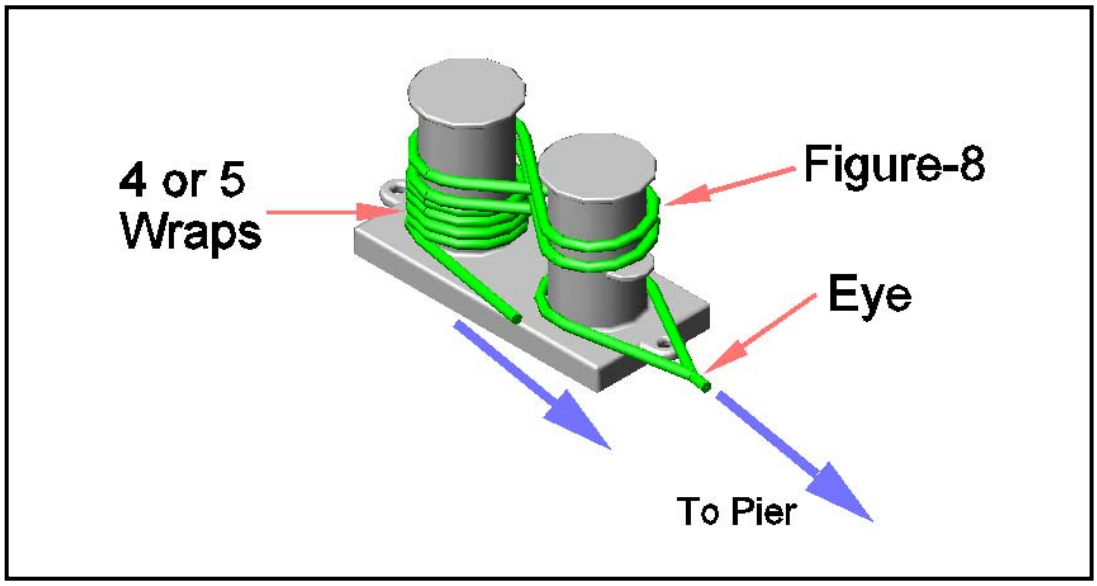

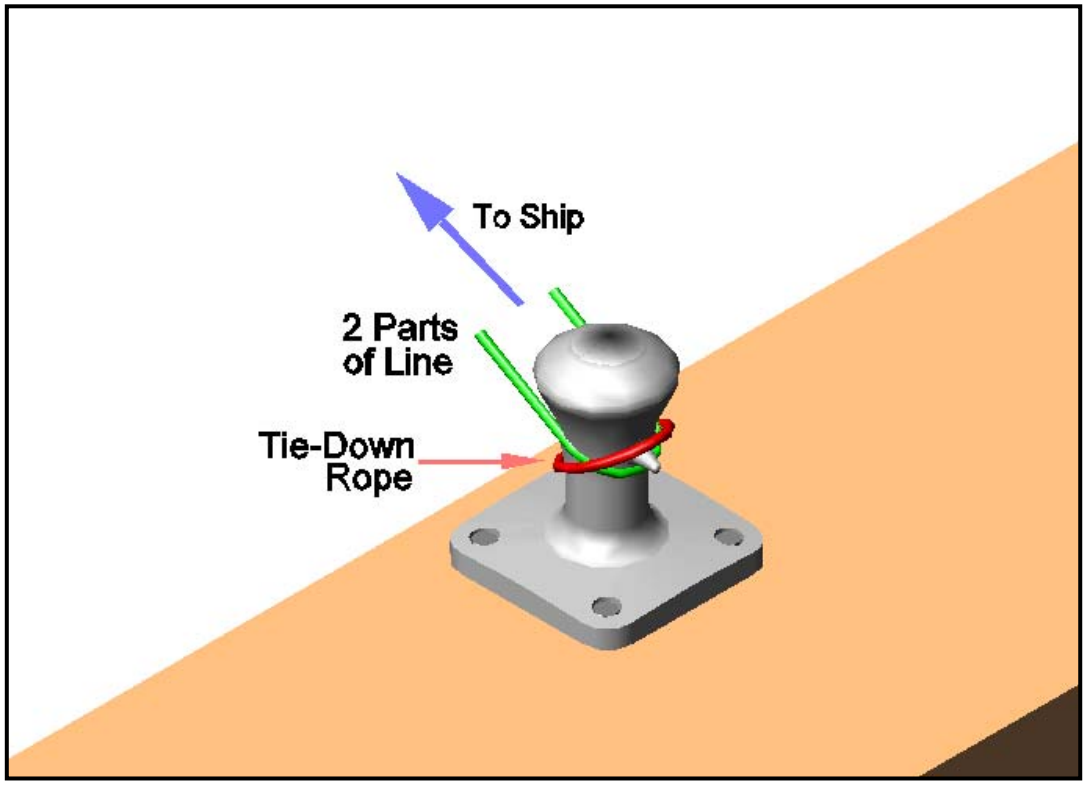

11-4 ACTION

11-4.1 **Planning.** NAVFAC Field Components, and Activities should assist Claimants, Regional Commanders, and Shipyards to determine the number, location, and critical ship class requirement for moorings used locally during Mooring Service Type III. Mooring Service Type should be identified during the planning phase of waterfront structures. Recommendations are provided in TR-6012-OCN Rev B U.S. *Navy Heavy Weather Mooring Safety Requirements*.

11-4.2 **Analysis and Design.** Engineers at NAVFAC Field Components should analyze moorings according to climatological criteria stated in TR-6012-OCN Rev B *U.S. Navy Heavy Weather Mooring Safety Requirement*s. Commercial enterprises providing mooring for US Navy ships should likewise conform to the criteria contained herein. Lines should provide a factor of safety against breaking of 2.5. Design pier and wharf fittings for a working load equal to the break strength of the largest lines expected to use the fitting. Moorings used for Type III service are subjected to significant dynamic wind loads and should be analyzed accordingly. NFESC has capability of providing this type of analysis on a reimbursable basis. Aramid and nylon lines also respond differently to dynamic loads and should be properly modeled in the analysis. Engineers should also verify the capacity of ship fittings for Type III Moorings. Dynamic analysis indicated that in order to moor a CVN in heavy weather a ship alt is required as well as facility upgrades at NNSY and NAVSTA Mayport. Ship alts, if required, should be coordinated with NAVSEA.

11-4.3 **Maintenance.** Maintenance personnel should inspect moorings to ensure acceptable performance during heavy weather. UFC 4-150-07 *Maintenance of Waterfront Facilities* and UFC 4-150-08 *Inspection of Mooring Hardware*, provide inspection guidance.

11-4.4 **Operations.** Activities should provide additional mooring lines to supplement ship mooring lines for use during Mooring Service Type III.

11-5 **ENVIRONMENTAL DESIGN CRITERIA FOR SELECTED SITES.** A risk-based approach is used in Heavy Weather mooring design to help ensure that ships are safe no matter where they are moored. Site-specific design criteria (i.e. winds, water levels, waves, etc.) associated each berth are used to help ensure that all ships are safely moored. These criteria are contained in TR-6012-OCN Rev B U.S. *Navy Heavy Weather Mooring Safety Requirements.*

GLOSSARY

AISC. American Institute of Steel Construction.

API. American Petroleum Institute.

DDS. Design Data Sheet

DOD. Department of Defense.

DM. Design manual.

MLW. Mean low water.

MLLW. Mean lower low water.

MSC. Military Sealift Command.

NAVFAC. Naval Facilities Engineering Command.

NAVSEA. Naval Sea Systems Command.

NBS. National Bureau of Standards.

NCDC. National Climatic Data Center.

NFESC. Naval Facilities Engineering Services Center.

NUREG. Nuclear Regulatory Commission.

OCIMF. Oil Companies International Marine Forum.

PIANC. Permanent International Association of Navigation Congresses.

APPENDIX A

REFERENCES

GOVERNMENT PUBLICATIONS

1. Unified Facilities Criteria

http://65.204.17.188//report/doc_ufc.html

UFC 1-200-01, Design: General Building Requirements

UFC 4-150-07, O&M: Maintenance of Waterfront Facilities

UFC 4-150-08, O&M: Inspection of Mooring Hardware

UFC 4-151-10, General Criteria for Waterfront Construction

Mil-Hdbk 1025/1 Piers & Wharves

2. U.S. Navy, Office of the Chief of Naval Operations

OPNAVINST 3140.24E, Warnings and Conditions of Readiness Concerning Hazardous or Destructive Weather Phenomena, 21 December 1993

3. Naval Facilities Engineering Command (NAVFACENGCOM) Engineering Innovation and Criteria Office
6506 Hampton Blvd
Norfolk, Va 23508-1278

http://www.lantdiv.navfac.navy.mil

CHESNAVFAC FPO-1-84(6)
Fleet Mooring Underwater Inspection Guidelines

CHESNAVFAC FPO-1-87(1)
Failure Analysis of Hawsers on BOBO Class MSC Ships at Tinian on 7 Dec 1986

MIL-HDBK 1025/1 Piers and Wharves

MO-104.2 Specialized Underwater Waterfront Facilities Inspections

4. Naval Facilities Engineering Service Center
1100 23rd Avenue

CR-6108-OCN, Anchor Mooring Line Computer Program Final Report, User's Manual for Program CSAP2

Port Hueneme, Ca 93043

http://www.nfesc.navy.mil

CR-6129-OCN, Added Mass and Damping Characteristics for Multiple Moored Ships

FPO-1-89(PD1), Purchase Description for Fleet Mooring Chain and Accessories

Handbook for Marine Geotechnical Engineering (NCEL, 1985)

SSR-6078-OCN, A Preliminary Assessment of Hurricane/Severe Storm Mooring At Naval Station Mayport/Jacksonville, FL

SSR-6107-OCN, Heavy Weather Mooring of USS Inchon (MCS-12) at U.S. Naval Station, Ingleside, Texas

SSR-6112-OCN, Heavy Weather Mooring of Ships Under Repair in the Hampton Roads Area in 1987

SSR-6119-OCN, D-8 Mooring Upgrade Design Report

SSR-6137-OCN, Heavy Weather Mooring Analyses of Selected Ships Under Repair, 1998

SSR-6145-OCN, Alternative Heavy Weather Mooring of USS INCHON (MCS-12) at U.S. Naval Station, Ingleside, Texas

SSR-6148-OCN, Heavy Weather Mooring Design Report of Avenger and Osprey Class Vessels, U.S. Naval Station, Ingleside, TX

SSR-6150-OCN, SURFLANT Heavy Weather Mooring Program, Phase I Completion Report

SSR-6176-OCN, Heavy Weather Mooring of FFG-7 and DDG-51 Ships at Kings Bay, Ga

SSR-6183-OCN, Concept Study – Mooring Service Type III For a CVN-68 at Navsta Mayport, Fla

SSR-6260-OCN, Hurricane Mooring of Ships and Craft at Naval Coastal Systems Center, Panama City, FL

SSR-6266-OCN, Plate Anchor Concept for Heavy Weather Mooring of CVN, LHD and LHA, Berth 42/42 Norfolk Naval Shipyard, Portsmouth, VA

SSR-6282-OCN, Heavy Weather Mooring, NAVSTA Pascagoula, MS
SSR-6342-OCN, Heavy Weather Mooring of USS JOHN F KENNEDY (CV 67) Naval Station, Mayport, FL

SSR-6368-OCN, Heavy Weather Mooring and Berthing-Findings/Recommendations for Selected Berths

TDS 83-05, Multiple STOCKLESS Anchors for Navy Fleet Moorings (NCEL)

TM-6001-OCN, Risk Analysis for Ships Moored at Piers – Generalized Evaluation of USS Tarawa (LHA-1) Mooring

TDS 83-08R, Drag Embedment Anchors for Navy Moorings (NCEL)

TM-6010-OCN, Some LHA(R)

Mooring Concepts

TN-1628, Wind-Induced Steady Loads on Ships (NCEL)

TN-1634, STATMOOR – A Single Point Mooring Static Analysis Program (NCEL)

TN-1774 Single and Tandem Anchor Performance of the New Navy Mooring Anchor (NCEL)

TR-2018-OCN, Assessment of Present Navy Methods for Determining Loads at Single Point
Moorings

TR-2039-OCN, Design Guide for Pile Driven Plate Anchors

TR-6003-OCN, Wind and Current Forces/Moments on Multiple Ships

TR-6004-OCN, Wind Effects on Moored Aircraft Carriers

TR-6005-OCN (Rev B), EMOOR – A Quick and Easy Method of Evaluating Ship Mooring at Piers and Wharves

TR-6012-OCN Rev B, U.S. Navy Heavy Weather Mooring Safety Requirements

TR-6014-OCN, Mooring Design Physical and Empirical Data

TR-6015-OCN, Foam-Filled Fender Design to Prevent Hull Damage

TR-6020-OCN, Mooring USS WASP (LHD-1) Class Ships

	TR-6022-OCN, Ship-Generated Waves
	TR-6023-OCN, Dynamic Analyses of a CVN-68 in a Heavy Weather Mooring
	TR-6027-OCN, Passing Ship Effects on Moored Ships
	TR-6028-OCN, Mooring USS TARAWA (LHA 1) Class Ships
	TR-6037-OCN, Improved Pearl Harbor and Kings Bay Anchor Designs
	TR-6045-OCN, LPD-17 USS SAN ANTONIO Class Berthing, Mooring and Anchoring
5. United States Naval Academy Annapolis, MD 21402-5018	EW-9-90, Evaluation of Viscous Damping Models for Single Point Mooring Simulation
	Viscous Drag Forces on Moored Ships in Shallow Water (D. Kriebel, 1992)
6. David Taylor Research Center Annapolis, MD 21402-5087	DTNSRDC/SPD-0936-01, User's Manual for the Standard Ship Motion Program, SMP81
7. Naval Environmental Prediction Research Facility Monterey, CA	TR-82-03 Hurricane Havens Handbook
8. Naval Research Laboratory 4555 Overlook Ave Washington, DC 20375	NRL/PU/7543-96-0025 Typhoon Havens Handbook for the Western Pacific and Indian Oceans
9. Naval Sea Systems Command Washington, DC	Naval Ships Technical Manual NSTM Chapers: 096, 581, 582, 611, and 613
	Design Data Sheet, DDS-581, "Calculations for Mooring Systems"

	Hitchhikers Guide to Navy Surface Ships, 1997
10. National Bureau of Standards	Series 118, Extreme Wind Speeds at 129 Stations in the Contiguous United States, 1979
	Series 124, Hurricane Wind Speeds in the United States, 1980
11. National Transportation Safety Board Washington, DC	PB91-916404, NSTB/MAR-91/04 Marine Accident Report Explosion and Fire Aboard the U.S. Tankship Jupiter Bay City, Michigan September 16, 1990
12. National Climatic Data Center 151 Patton Avenue Asheville, NC 28801-5001	E/CC31:MJC Letter Report of 8 Dec 87
13. Nuclear Regulatory Commission Washington, DC	NUREG/CR-2639 Historical Extreme Winds for the United States – Atlantic and Gulf of Mexico Coastlines
	NUREG/CR-4801 Climatology of Extreme Winds in Southern California
	NUREG-0800 Tornado Resistant Design of Nuclear Power Plant Structures, Nuclear Safety, Volume 15, No. 4, Regulatory Guide, July 1974
14. U.S. Army Corps of Engineers	Special Report No. 7, Tides and Tidal Datums in the United States, 1981
	Shore Protection Manual, 1984
	Coastal Engineering Manual (CEM)

NON-GOVERNMENT PUBLICATIONS

1. American Institute of Steel Construction	Manual of Steel Construction
2. American Petroleum Institute 1220 L Street NW Washington, DC 20005	API RP 2T
3. Cordage Institute 350 Lincoln Street Hingham, MA 02043	Cordage Institute Technical Manual
2. Oil Companies International Marine Forum (OCIMF)	Mooring Equipment Guidelines (1992) Recommendations for Equipment Employed in the Mooring of Ships at Single Point Moorings (1993) Prediction of Wind and Current Loads On VLCCs (1994) Single Point Mooring and Maintenance Guide (1995)
5. Permanent International Association of Navigation Congresses (PIANC)	Criteria for Movement of Moored Ships in Harbors: A Practical Guide, 1995

AUTHORED PUBLICATIONS

Flory, J.F., M.R. Parsey, and H.A. McKenna. The Choice Between Nylon and Polyester for Large Marine Ropes, ASME 7th Conference on Offshore Mechanics and Arctic Engineering, Houston, TX, Feb 1988.

Flory, J.F., M.R. Parsey, and C. Leech. A Method of Predicting Rope Life and Residual Strength, MTS Oceans' 89, Sep 1989.

Flory, J.F., H.A. McKenna, and M.R. Parsey. Fiber Ropes for Ocean Engineering in the 21st Century, ASCE, C.E. in the Oceans, Nov 1992a.

Flory, J.F., J.W.S. Harle, R.S. Stonor, and Y. Luo. Failure Probability Analysis Techniques for Long Mooring Lines, 24th Offshore Technology Conference Proceedings, Offshore Technology Conference, Houston, TX, 1992b.

Headland, J., Seelig, W., and C. Chern. Dynamic Analysis of Moored Floating Drydocks, ASCE Proceedings Ports 89, 1989.

Headland, J., Seelig, W. Mooring Dynamics Due to Wind Gust Fronts, 1998.

Headland, J., Seelig. W., and Kreibel, D., Broadside Current Forces on Ships, Proceedings Civil Engineering in the Oceans V, ASCE, 1992.

Hearle, J.W.S., M.R. Parsey, M.S. Overington, and S.J. Banfield. Modeling the Long-Term Fatigue Performance of Fibre Ropes, Proceedings of the 3rd International Offshore and Polar Engineering Conference, 1993.

Hooft, J.P., Advanced Dynamics of Marine Structures, John Wiley & Sons, New York, New York, 1982.

Kizakkevariath, S. Hydrodynamic Analysis and Computer Simulation Applied to Ship Interaction During Maneuvering in Shallow Channels, PhD Thesis, Virginia Polytechnic Institute and State University, May 1989.

Myers, John J., et al. Handbook of Ocean and Underwater Engineers, McGraw-Hill Book Company, New York, NY, 1969.

Occasion, L.K., The Analysis of Passing Vessel Effects on Moored Tankers, UCLA Report PTE-490x, December 1996.

Ochi-Shin, Wind Turbulent Spectra for Design Consideration of Offshore Structures, 1988

Parsey, Fatigue of SPM Mooring Hawsers, 1982

Simiu, E. and Scanlan, R., Wind Effects on Structures, Third Edition, John Wiley & Sons, 1996

Weggel, J.R. and Sorensen, R. M., Development of Ship Wave Design Information, Proceedings of the International Conference on Coastal Engineering, ASCE, 1984

Wichers, J., A Simulation Model for a Single Point Moored Tanker, Maritime Research Institute, Netherlands, Publication No. 797, 1988.